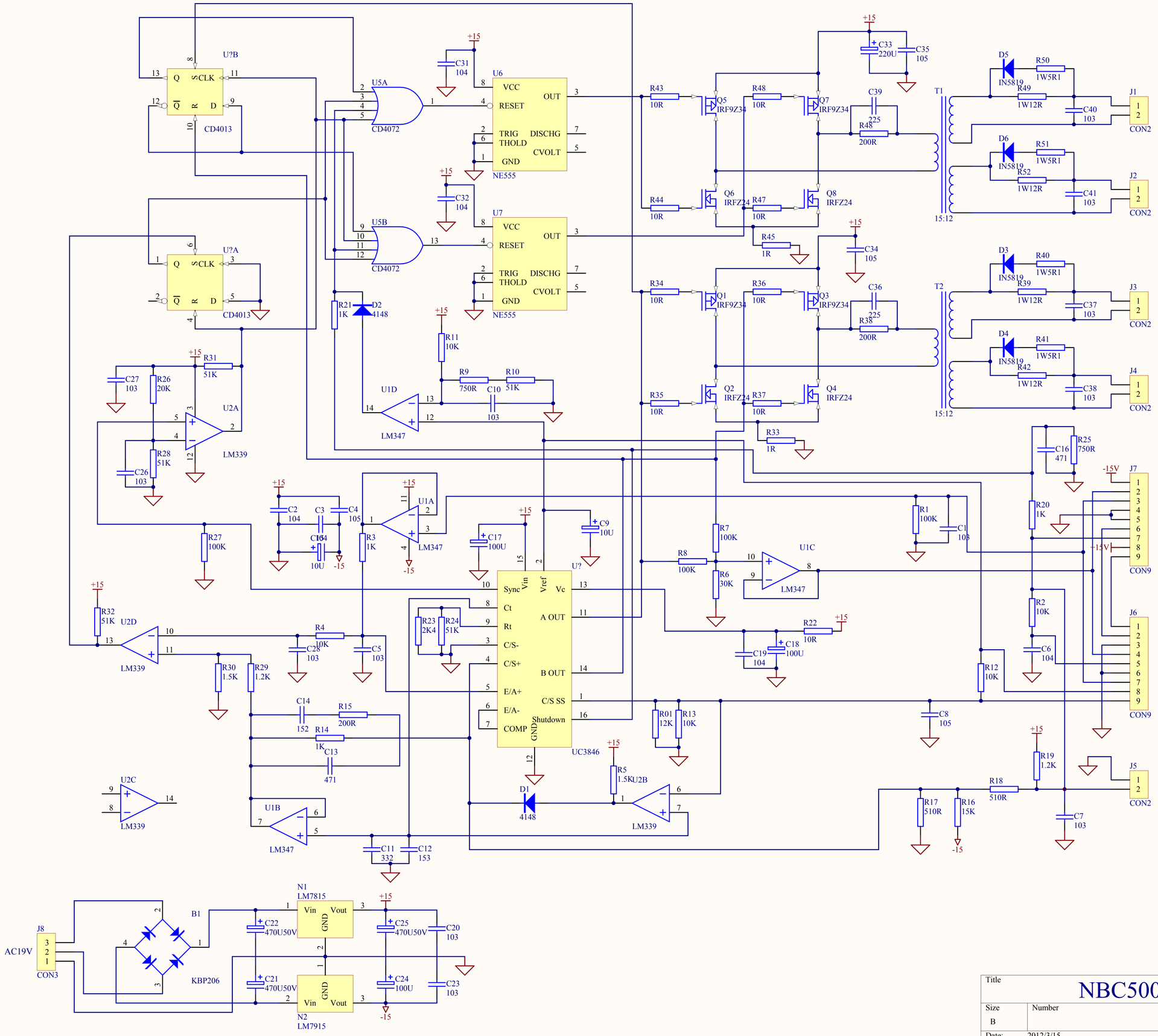

Title		
NBC500		
Size: B	Number	Revision
Date: 2012/3/15		Sheet of
File: C:\Users\..\ .Sch		Drawn By: