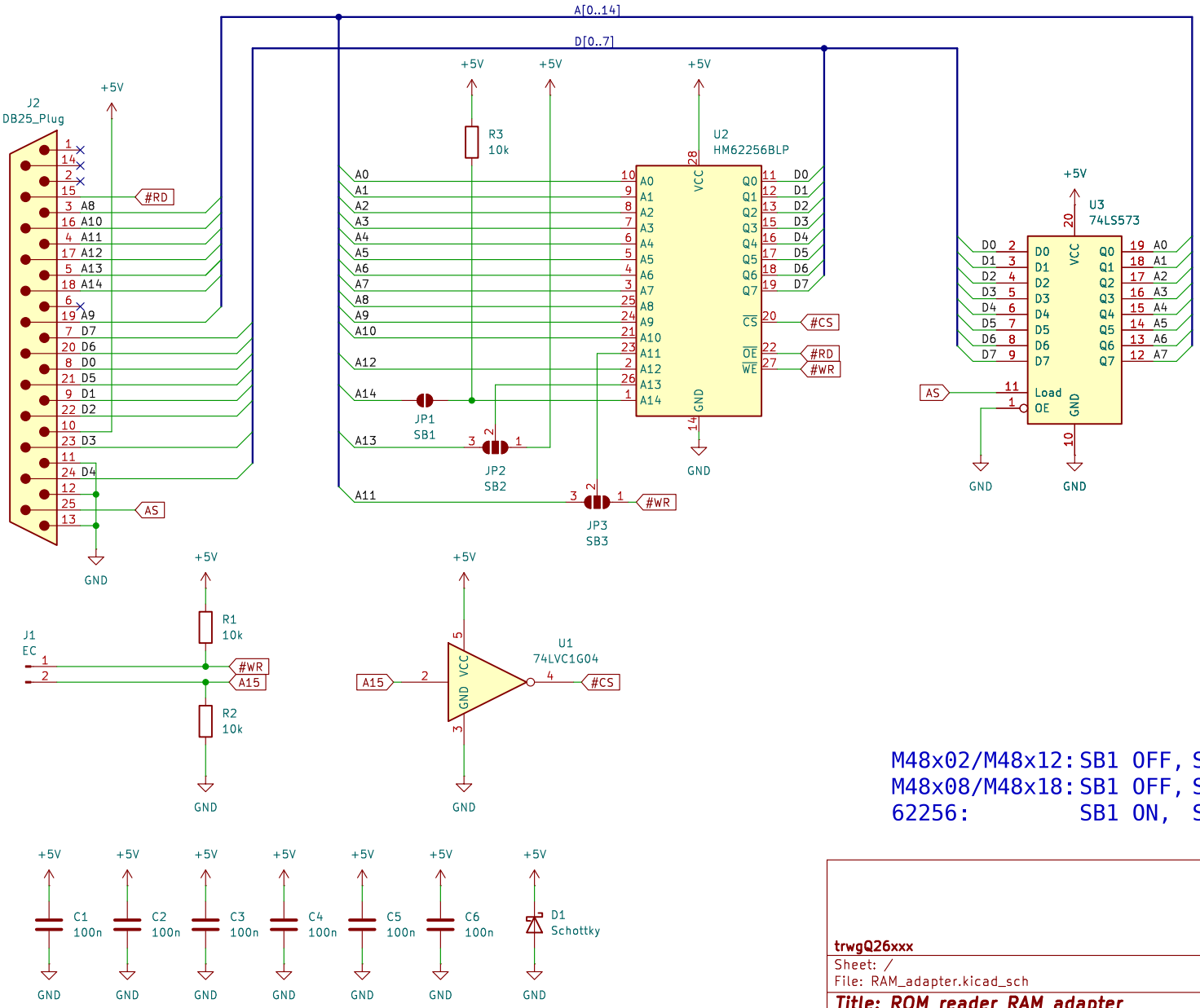

M48x02/M48x12: SB1 OFF, SB2 1-2, SB3 1-2
M48x08/M48x18: SB1 OFF, SB2 1-2, SB3 2-3
62256: SB1 ON, SB2 2-3, SB3 2-3

trwgQ26xxx

Sheet: /
File: RAM_adapter.kicad_sch

Title: ROM reader RAM adapter

Size: A4	Date: 2024-08-17	**Rev: A**
KiCad E.D.A. 8.0.7		Id: 1/1