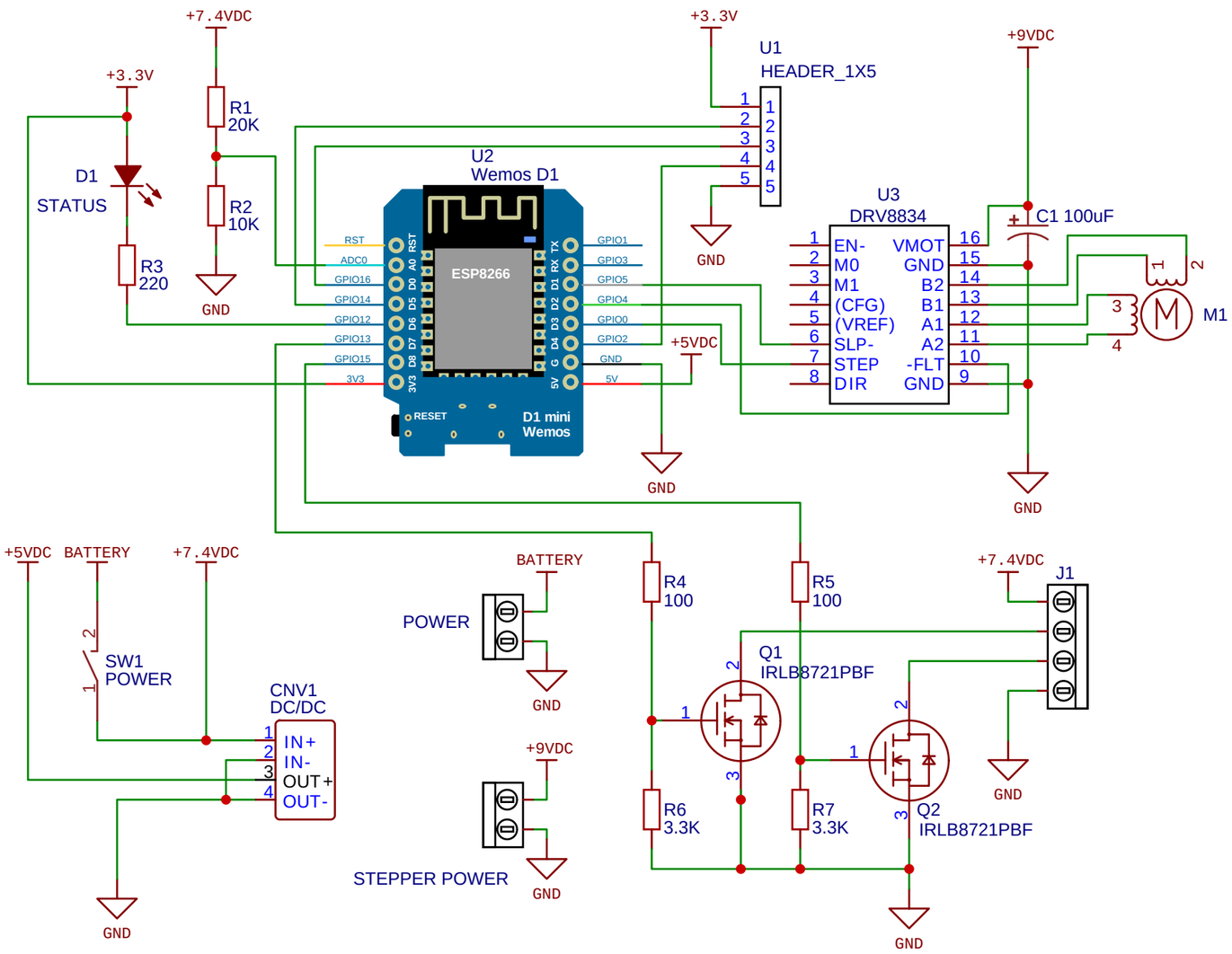

TITLE: TopHat		REV: 1.0
EasyEDA	Company: Liquidbytes.se	Sheet: 1/1
	Date: 2021-01-05 Drawn By: Henrik Östman	