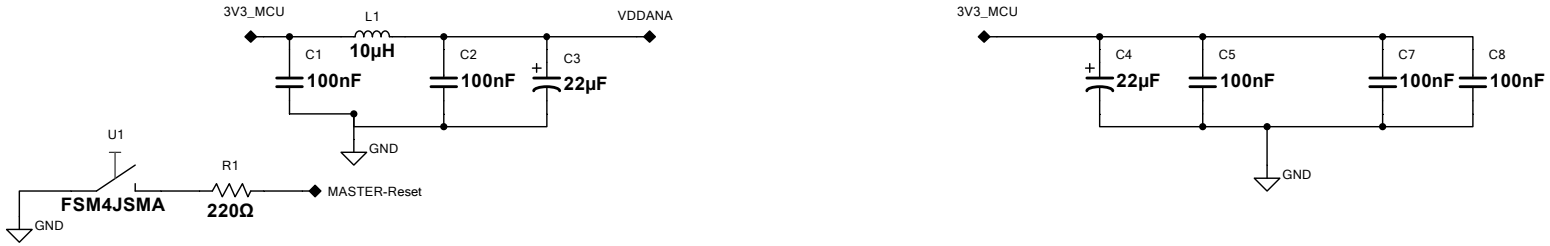

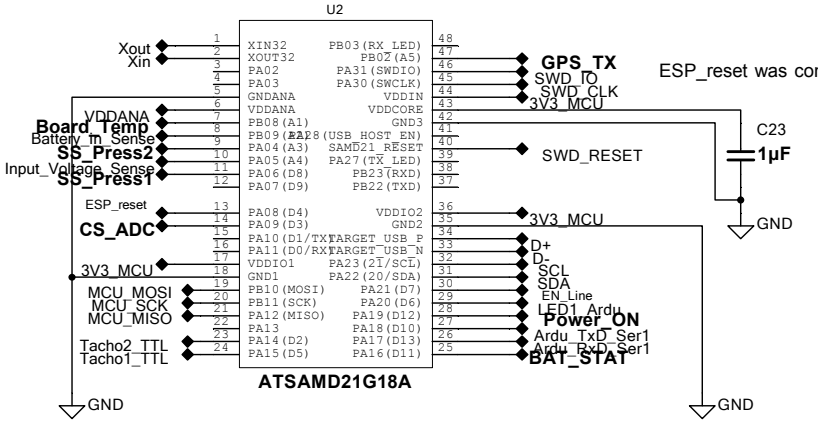

ESP_reset was connected to PA27 in rev. 1.0

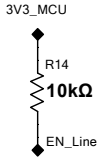

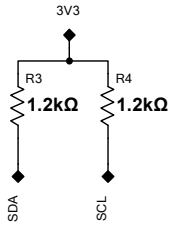

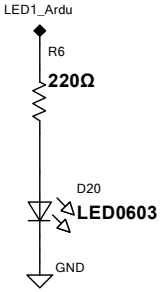

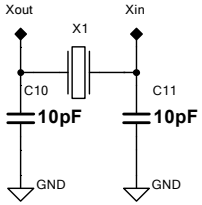

SC1 SC2 SC3 SC4 SC5 SC6

Sensors Connectors Tacho Power Serial_Input MPU

BihnAiry	Patrick Bihn mEFIS	
	Subpage: Mainboard	
	Size: A3	Document No:	Rev: 1.1
Date: 04.07.2017		Sheet 1 of 7

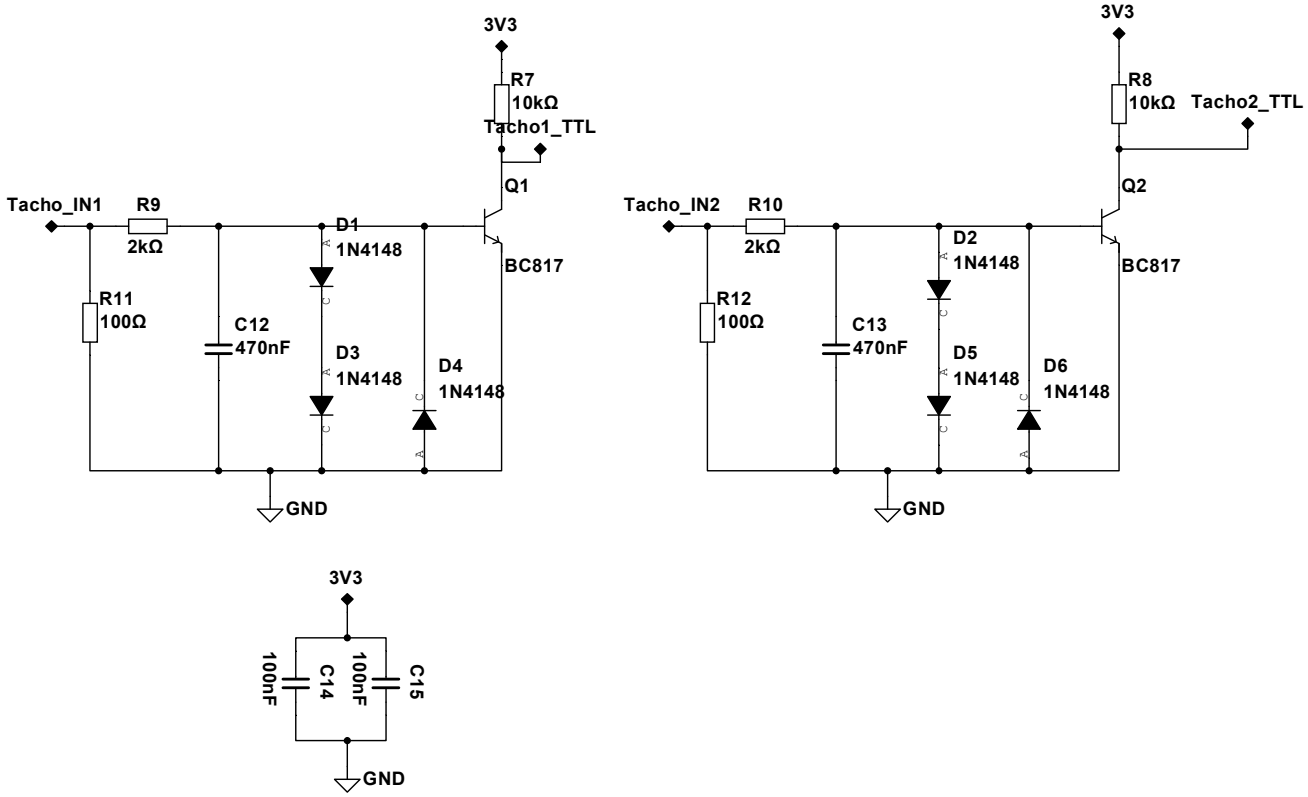

BihnAiry	Patrick Bihn mEFIS	
	Subpage: Tacho(SC3)	
	Size: A3	Document No:	Rev: 1.1
Date: 04.07.2017		Sheet 2 of 7

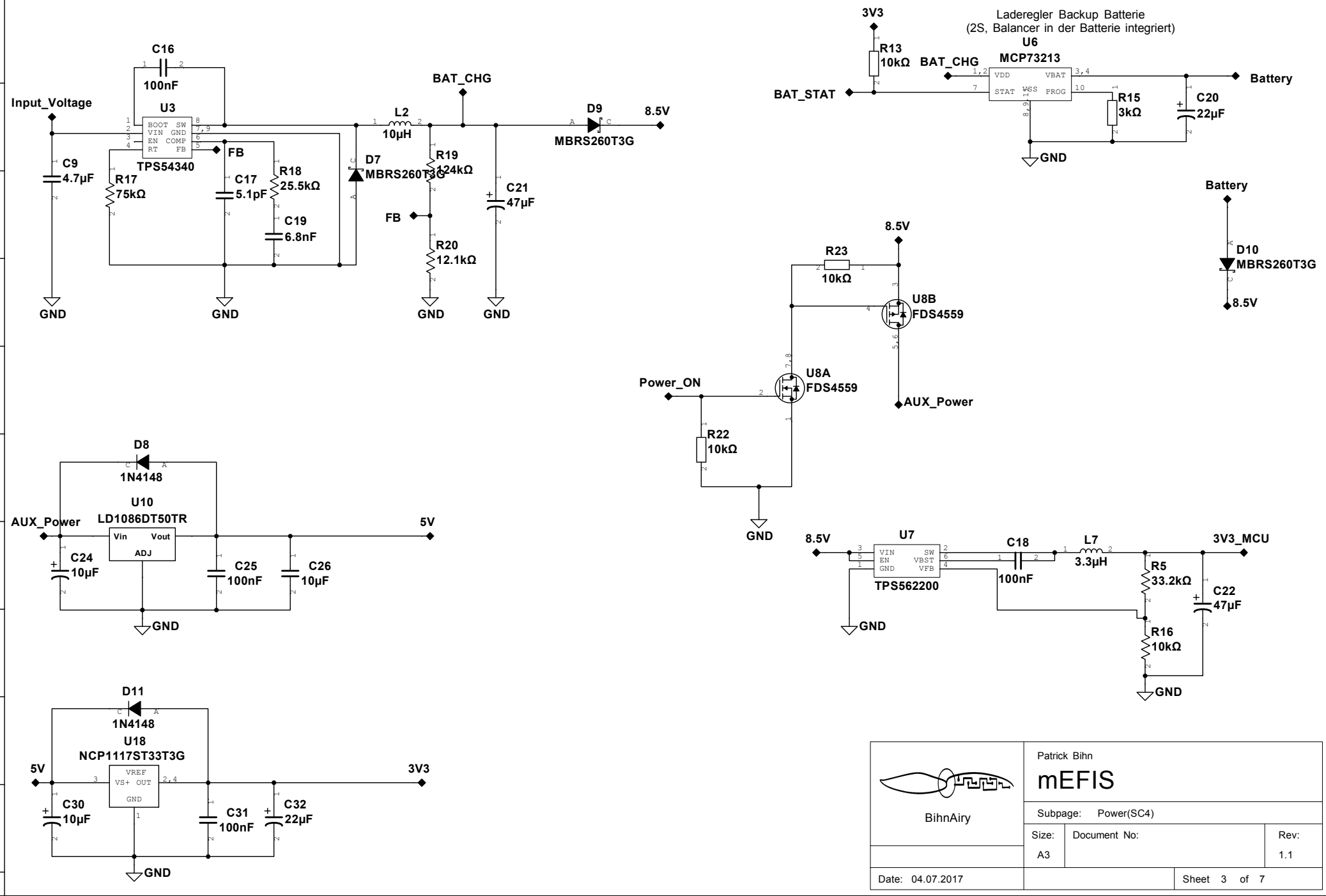
Laderegler Backup Batterie
(2S, Balancer in der Batterie integriert)
U6
MCP73213
VDD
VBAT
STAT
VSS
PROG
3V3
R13
10kΩ
BAT_CHG
BAT_STAT
R15
3kΩ
C20
22µF
Battery
GND
C16
100nF
U3
TPS54340
BOOT SW
VIN GND
EN COMP
RT FB
Input_Voltage
C9
4.7µF
R17
75kΩ
FB
C17
5.1pF
R18
25.5kΩ
C19
6.8nF
D7
MBRS260T3G
L2
10µH
BAT_CHG
R19
1.24kΩ
FB
R20
12.1kΩ
C21
47µF
D9
MBRS260T3G
8.5V
Battery
D10
MBRS260T3G
8.5V
R23
10kΩ
8.5V
U8B
FDS4559
U8A
FDS4559
Power_ON
R22
10kΩ
AUX_Power
D8
1N4148
U10
LD1086DT50TR
Vin
Vout
ADJ
AUX_Power
5V
C24
10µF
C25
100nF
C26
10µF
8.5V
U7
VIN
EN
GND
SW
VBST
VFB
TPS562200
C18
100nF
L7
3.3µH
3V3_MCU
R5
33.2kΩ
C22
47µF
R16
10kΩ
D11
1N4148
U18
NCP1117ST33T3G
VREF
VS+ OUT
GND
5V
3V3
C30
10µF
C31
100nF
C32
22µF
BihnAiry
Patrick Bihn
mEFIS
Subpage: Power(SC4)
Size: A3
Document No:
Rev: 1.1
Date: 04.07.2017
Sheet 3 of 7

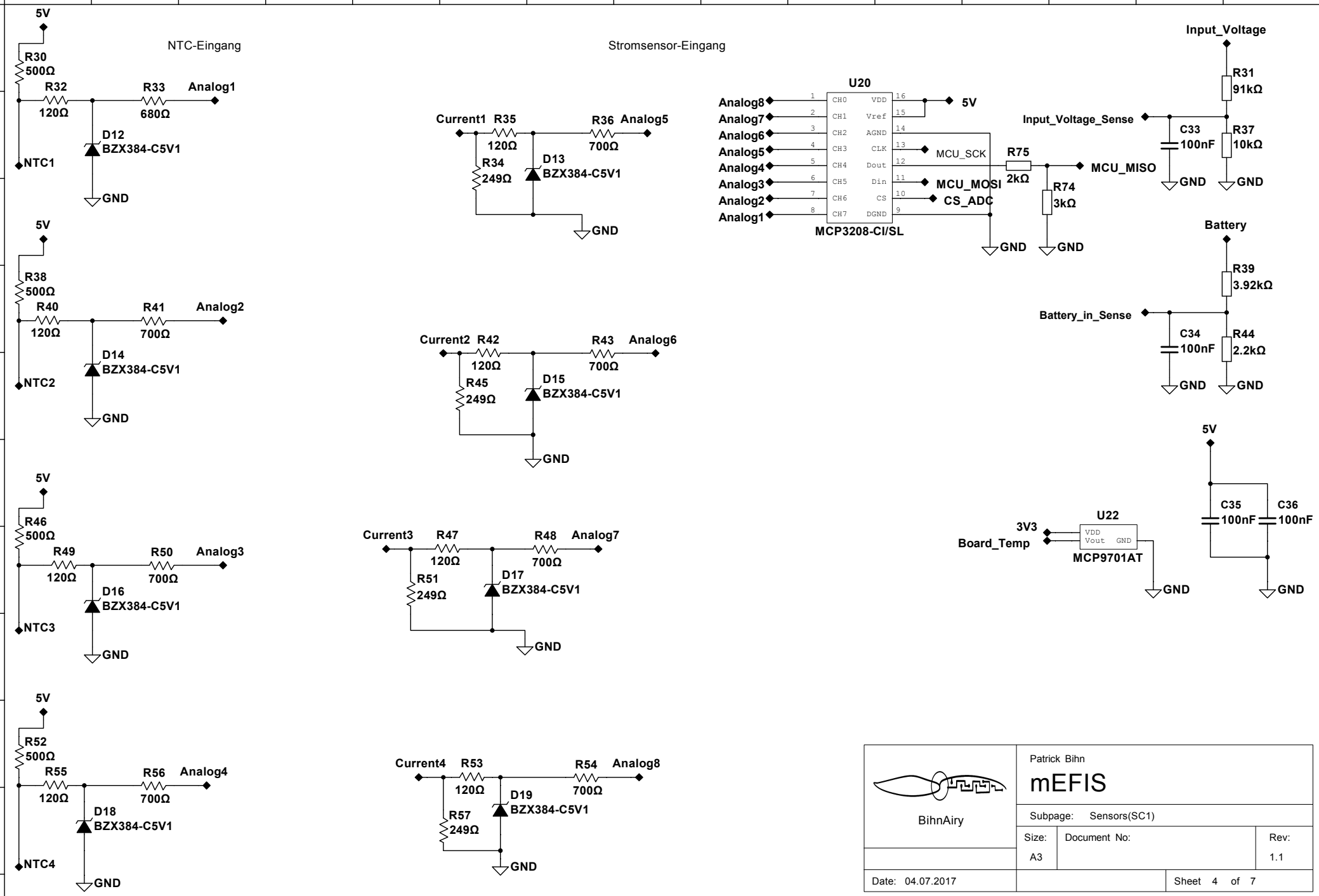
NTC-Eingang
Stromsensor-Eingang
5V
R30 500Ω
R32 120Ω
R33 680Ω
Analog1
D12 BZX384-C5V1
NTC1
GND
R38 500Ω
R40 120Ω
R41 700Ω
Analog2
D14 BZX384-C5V1
NTC2
R46 500Ω
R49 120Ω
R50 700Ω
Analog3
D16 BZX384-C5V1
NTC3
R52 500Ω
R55 120Ω
R56 700Ω
Analog4
D18 BZX384-C5V1
NTC4
Current1 R35 120Ω
R36 700Ω
Analog5
R34 249Ω
D13 BZX384-C5V1
Current2 R42 120Ω
R43 700Ω
Analog6
R45 249Ω
D15 BZX384-C5V1
Current3 R47 120Ω
R48 700Ω
Analog7
R51 249Ω
D17 BZX384-C5V1
Current4 R53 120Ω
R54 700Ω
Analog8
R57 249Ω
D19 BZX384-C5V1
U20
Analog8
Analog7
Analog6
Analog5
Analog4
Analog3
Analog2
Analog1
CH0 CH1 CH2 CH3 CH4 CH5 CH6 CH7
VDD Vref AGND CLK Dout Din CS DGND
MCU_SCK
MCU_MOSI
CS_ADC
MCP3208-CI/SL
R75 2kΩ
R74 3kΩ
MCU_MISO
Input_Voltage
R31 91kΩ
Input_Voltage_Sense
C33 100nF
R37 10kΩ
Battery
R39 3.92kΩ
Battery_in_Sense
C34 100nF
R44 2.2kΩ
C35 100nF
C36 100nF
U22
3V3
Board_Temp
VDD Vout GND
MCP9701AT
BihnAiry
Patrick Bihn
mEFIS
Subpage: Sensors(SC1)
Size: A3
Document No:
Rev: 1.1
Date: 04.07.2017
Sheet 4 of 7

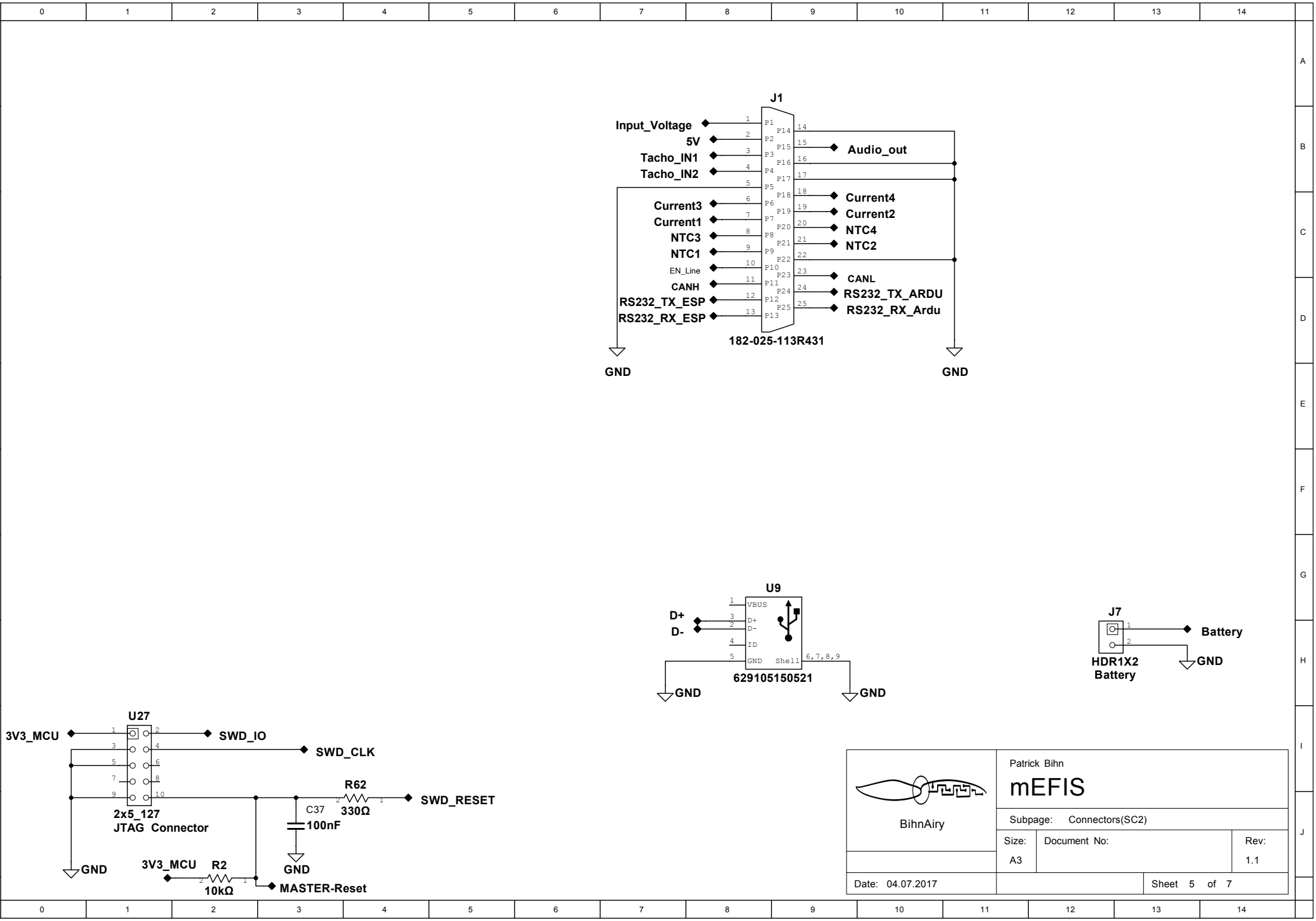
J1
Input_Voltage
5V
Tacho_IN1
Tacho_IN2
Current3
Current1
NTC3
NTC1
EN_Line
CANH
RS232_TX_ESP
RS232_RX_ESP
Audio_out
Current4
Current2
NTC4
NTC2
CANL
RS232_TX_ARDU
RS232_RX_Ardu
182-025-113R431
GND
GND
U9
D+
D-
VBUS
D+
D-
ID
GND
Shell
6,7,8,9
629105150521
GND
GND
J7
Battery
HDR1X2
Battery
GND
U27
3V3_MCU
SWD_IO
SWD_CLK
SWD_RESET
R62
330Ω
C37
100nF
2x5_127
JTAG Connector
GND
3V3_MCU
R2
10kΩ
GND
MASTER-Reset
BihnAiry
Patrick Bihn
mEFIS
Subpage: Connectors(SC2)
Size: A3
Document No:
Rev: 1.1
Date: 04.07.2017
Sheet 5 of 7

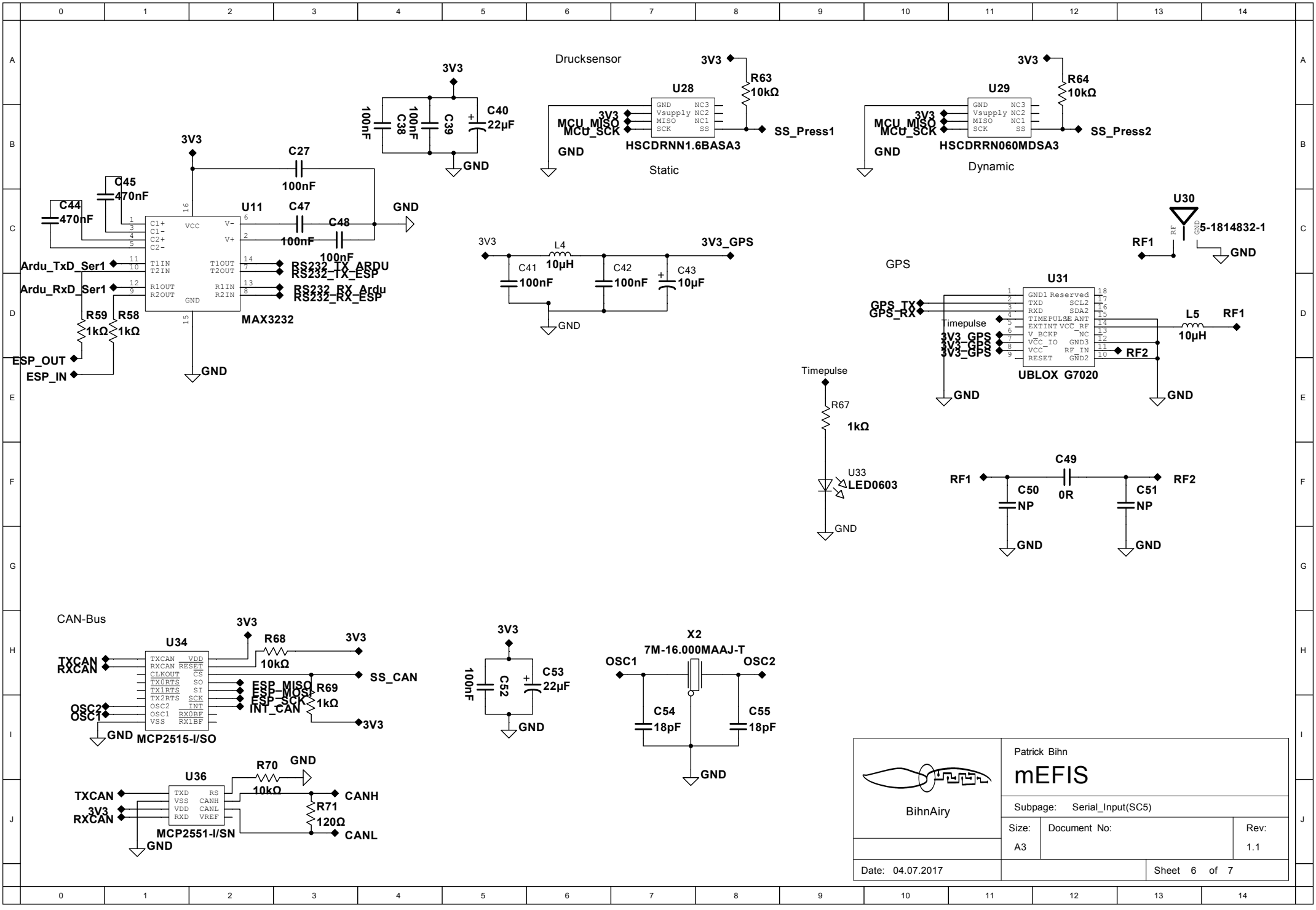
Drucksensor
U28
HSCDRNN1.6BASA3
Static
U29
HSCDRRN060MDSA3
Dynamic
3V3
MCU_MISO
MCU_SCK
SS_Press1
SS_Press2
R63 10kΩ
R64 10kΩ
C38 100nF
C39 100nF
C40 22µF
GND
U11
MAX3232
C27 100nF
C45 470nF
C44 470nF
C47 100nF
C48 100nF
Ardu_TxD_Ser1
Ardu_RxD_Ser1
RS232_TX_ARDU
RS232_TX_ESP
RS232_RX_Ardu
RS232_RX_ESP
R59 1kΩ
R58 1kΩ
ESP_OUT
ESP_IN
L4 10µH
C41 100nF
C42 100nF
C43 10µF
3V3_GPS
U30
5-1814832-1
RF1
RF
GPS
U31
UBLOX G7020
GPS_TX
GPS_RX
Timepulse
3V3_GPS
L5 10µH
RF2
R67 1kΩ
U33
LED0603
C49 0R
C50 NP
C51 NP
CAN-Bus
U34
MCP2515-I/SO
TXCAN
RXCAN
R68 10kΩ
SS_CAN
ESP_MISO
ESP_MOSI
ESP_SCK
INT_CAN
R69 1kΩ
OSC2
OSC1
C52 100nF
C53 22µF
X2
7M-16.000MAAJ-T
C54 18pF
C55 18pF
U36
MCP2551-I/SN
R70 10kΩ
CANH
CANL
R71 120Ω
Patrick Bihn
mEFIS
BihnAiry
Subpage: Serial_Input(SC5)
Size: A3
Document No:
Rev: 1.1
Date: 04.07.2017
Sheet 6 of 7

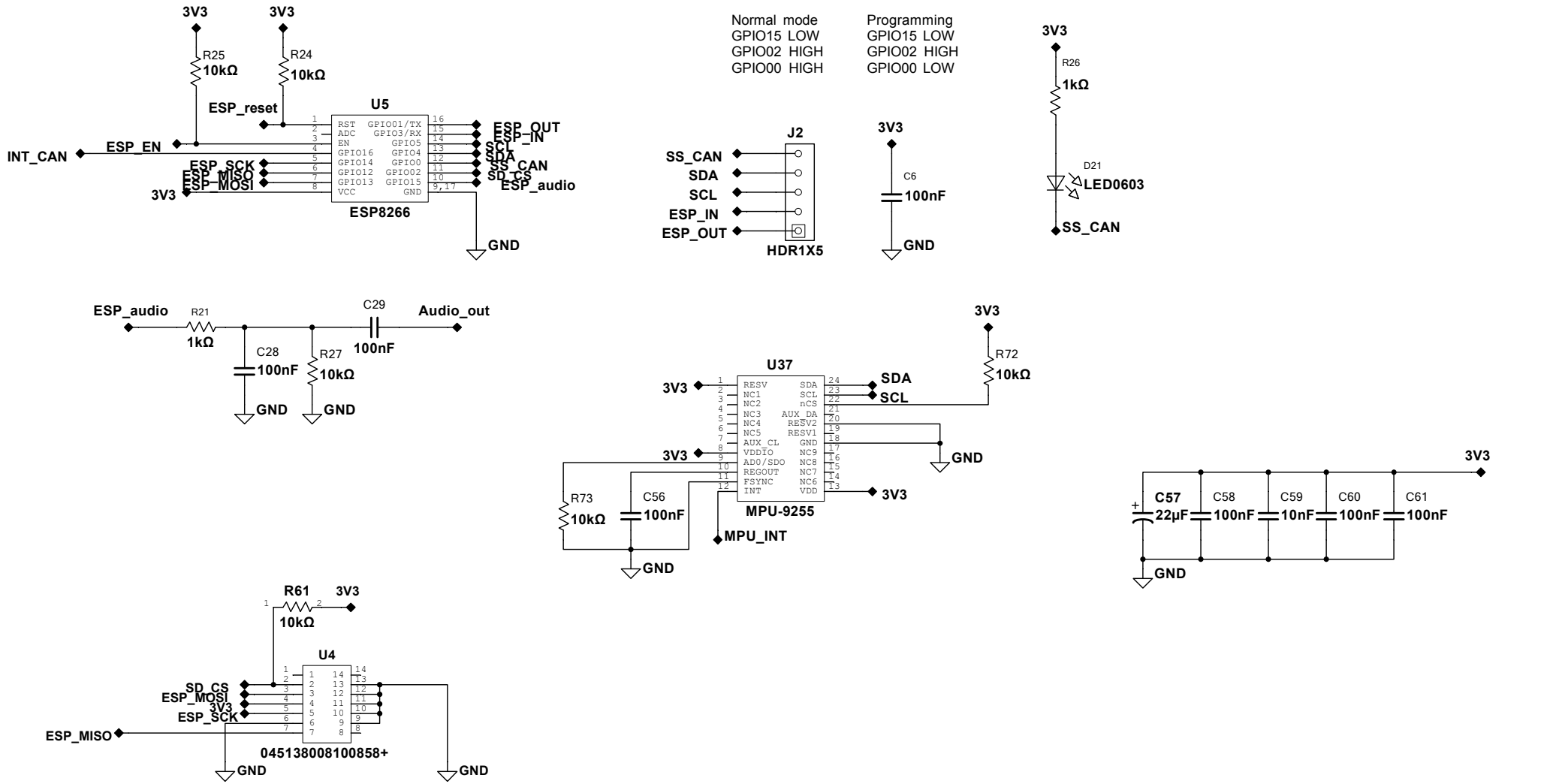

BihnAiry	Patrick Bihn mEFIS	
	Subpage: MPU(SC6)	
	Size: A3	Document No:	Rev: 1.1
Date: 04.07.2017		Sheet 7 of 7