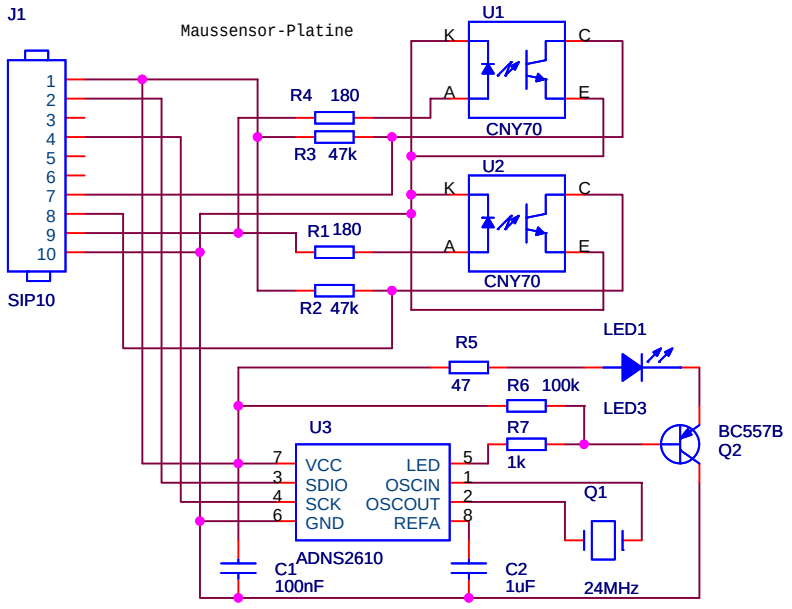

Title <Title>			
Size Custom	Document Number <Doc>		Rev <Rev>
Date: Monday, January 16, 2006		Sheet 1 of 1	