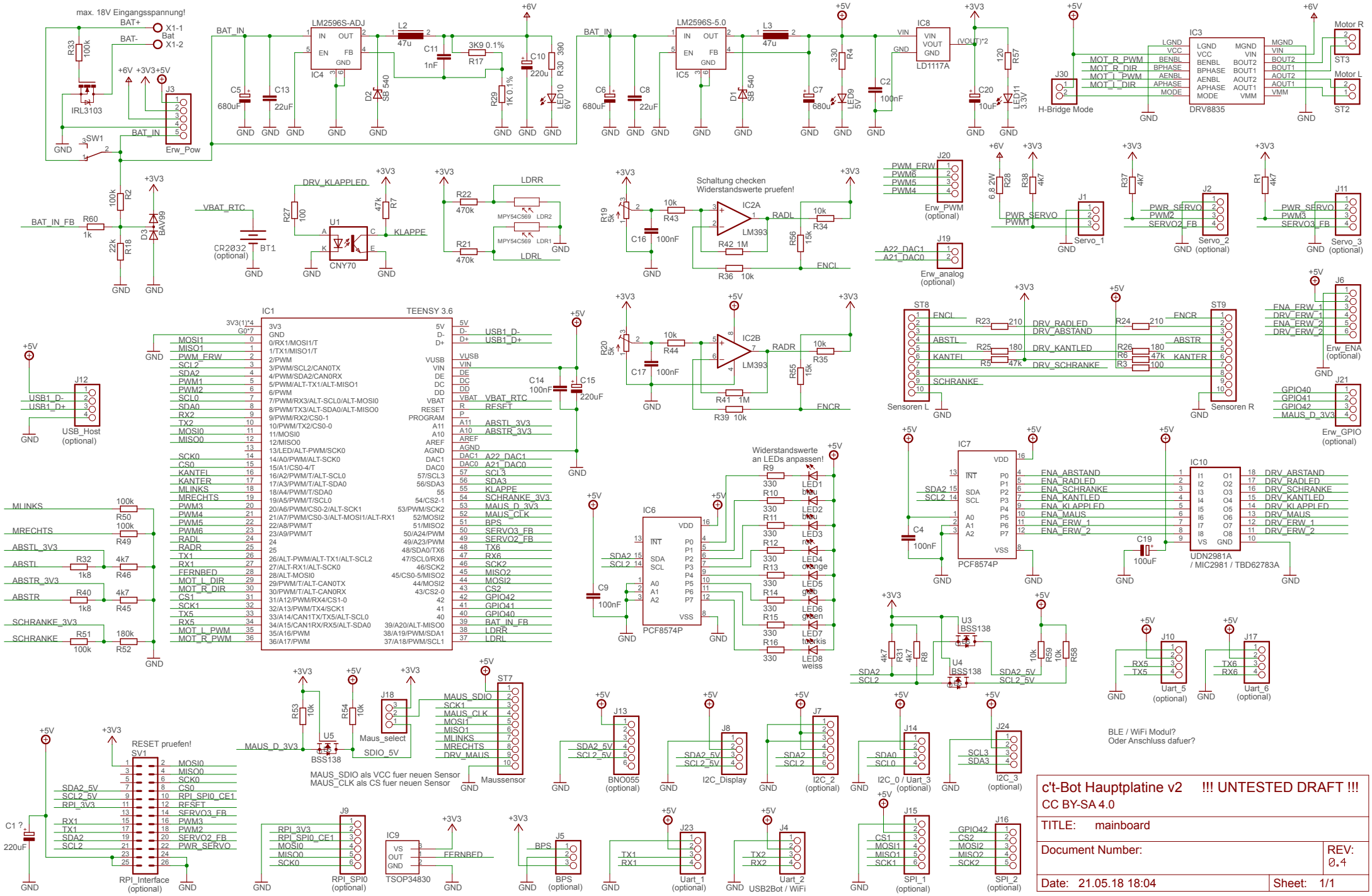
max. 18V Eingangsspannung!
BAT+
BAT-
X1-1 Bat
X1-2
IRL3103
J3
Erw_Pow
SW1
LM2596S-ADJ
IC4
LM2596S-5.0
IC5
LD1117A
IC8
H-Bridge Mode
J30
IC3
DRV8835
Motor R
Motor L
ST3
ST2
CR2032 (optional)
BT1
CNY70
U1
DRV_KLAPPLED
KLAPPE
LDRR
LDRL
MPY54C569
Schaltung checken
Widerstandswerte pruefen!
LM393
IC2A
IC2B
Erw_PWM (optional)
Erw_analog (optional)
Servo_1
Servo_2 (optional)
Servo_3 (optional)
IC1
TEENSY 3.6
USB_Host (optional)
Sensoren L
Sensoren R
Erw_ENA (optional)
Erw_GPIO (optional)
Widerstandswerte an LEDs anpassen!
PCF8574P
IC7
IC10
UDN2981A / MIC2981 / TBD62783A
BSS138
Uart_5 (optional)
Uart_6 (optional)
BLE / WiFi Modul?
Oder Anschluss dafuer?
RESET pruefen!
SV1
RPI_Interface (optional)
Maus_select
Maussensor
MAUS_SDIO als VCC fuer neuen Sensor
MAUS_CLK als CS fuer neuen Sensor
BNO055 (optional)
I2C_Display
I2C_2 (optional)
I2C_0 / Uart_3 (optional)
I2C_3 (optional)
RPI_SPI0 (optional)
TSOP34830
BPS (optional)
Uart_1 (optional)
USB2Bot / WiFi
Uart_2
SPI_1 (optional)
SPI_2 (optional)
c't-Bot Hauptplatine v2
!!! UNTESTED DRAFT !!!
CC BY-SA 4.0
TITLE: mainboard
Document Number:
REV: 0.4
Date: 21.05.18 18:04
Sheet: 1/1