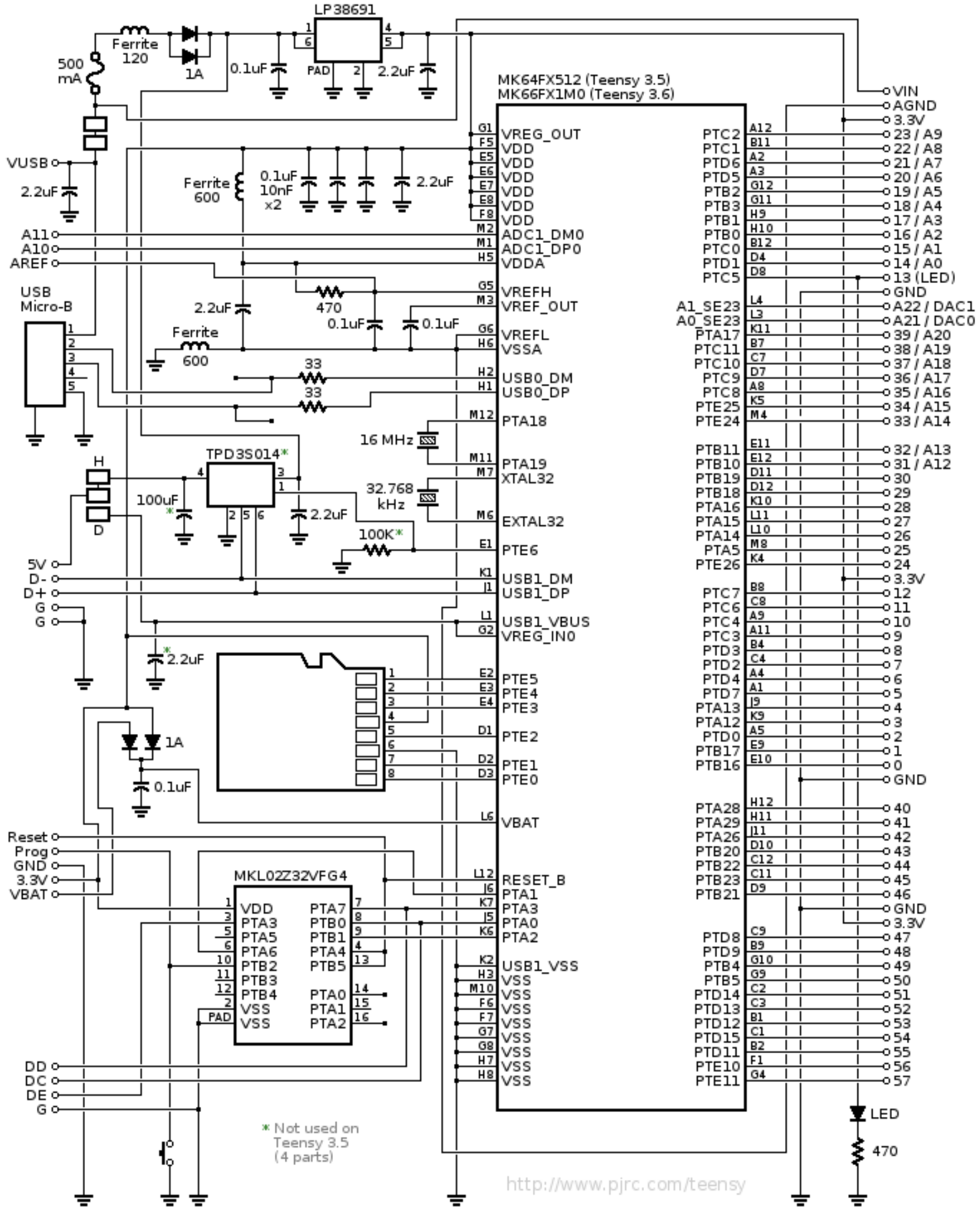
LP38691
Ferrite 120
500 mA
1A
0.1uF
PAD
2.2uF
MK64FX512 (Teensy 3.5)
MK66FX1M0 (Teensy 3.6)
VUSB
2.2uF
Ferrite 600
0.1uF 10nF x2
2.2uF
A11
A10
AREF
USB Micro-B
2.2uF
470
0.1uF
0.1uF
Ferrite 600
33
33
16 MHz
TPD3S014*
H
D
100uF*
2.2uF
32.768 kHz
100K*
5V
D-
D+
G
G
2.2uF*
1A
0.1uF
Reset
Prog
GND
3.3V
VBAT
MKL02Z32VFG4
VDD
PTA3
PTA5
PTA6
PTB2
PTB3
PTB4
VSS
VSS
PAD
PTA7
PTB0
PTB1
PTA4
PTB5
PTA0
PTA1
PTA2
DD
DC
DE
G
VREG_OUT
VDD
ADC1_DM0
ADC1_DP0
VDDA
VREFH
VREF_OUT
VREFL
VSSA
USB0_DM
USB0_DP
PTA18
PTA19
XTAL32
EXTAL32
PTE6
USB1_DM
USB1_DP
USB1_VBUS
VREG_IN0
PTE5
PTE4
PTE3
PTE2
PTE1
PTE0
VBAT
RESET_B
PTA1
PTA3
PTA0
PTA2
USB1_VSS
VSS
VIN
AGND
3.3V
23 / A9
22 / A8
21 / A7
20 / A6
19 / A5
18 / A4
17 / A3
16 / A2
15 / A1
14 / A0
13 (LED)
GND
A22 / DAC1
A21 / DAC0
39 / A20
38 / A19
37 / A18
36 / A17
35 / A16
34 / A15
33 / A14
32 / A13
31 / A12
30
29
28
27
26
25
24
3.3V
12
11
10
9
8
7
6
5
4
3
2
1
0
GND
40
41
42
43
44
45
46
GND
3.3V
47
48
49
50
51
52
53
54
55
56
57
LED
470
* Not used on Teensy 3.5 (4 parts)
http://www.pjrc.com/teensy