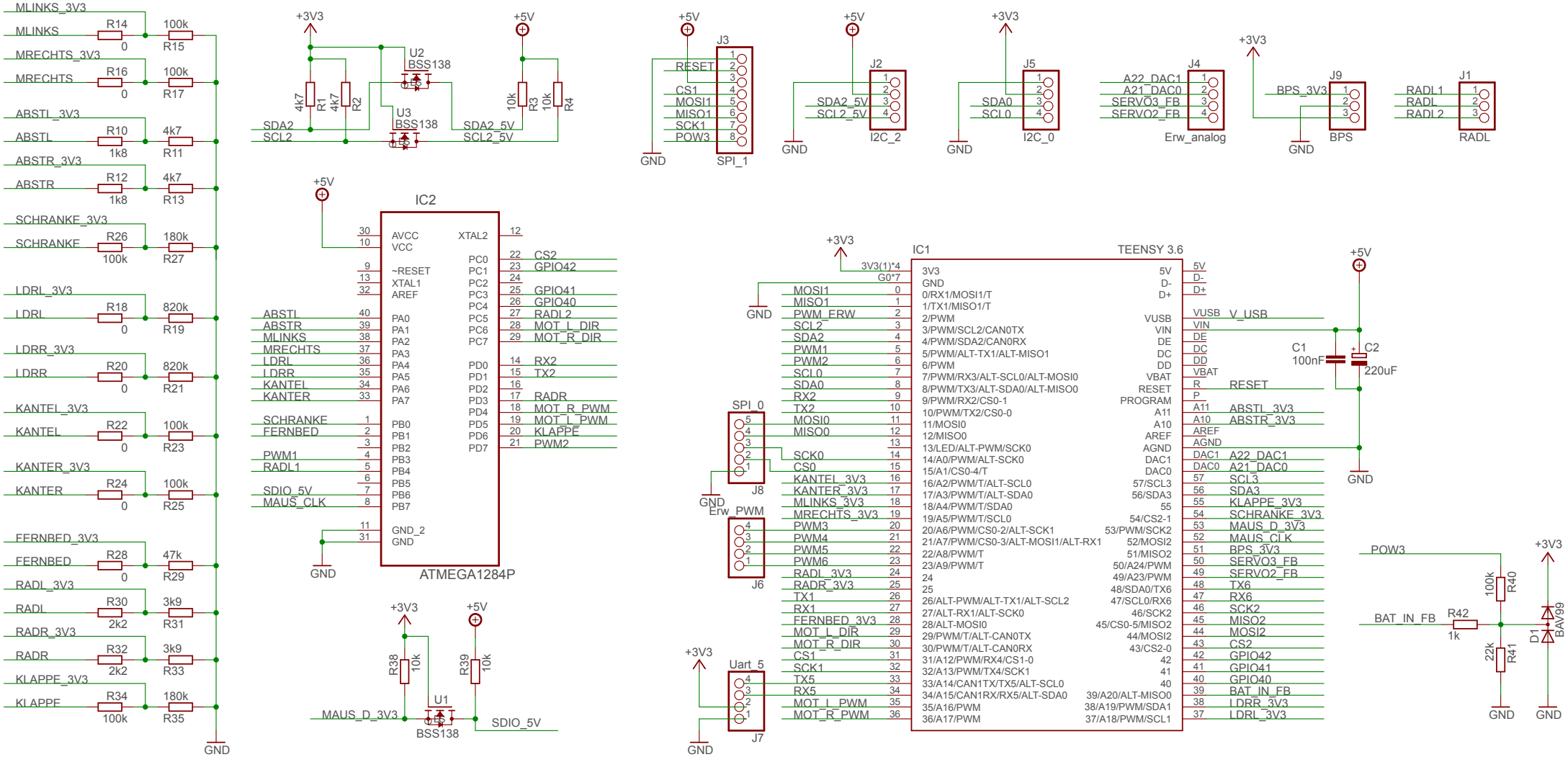
MLINKS_3V3
MLINKS
R14
0
100k
R15
MRECHTS_3V3
MRECHTS
R16
0
100k
R17
ABSTL_3V3
ABSTL
R10
1k8
4k7
R11
ABSTR_3V3
ABSTR
R12
1k8
4k7
R13
SCHRANKE_3V3
SCHRANKE
R26
100k
180k
R27
LDRL_3V3
LDRL
R18
0
820k
R19
LDRR_3V3
LDRR
R20
0
820k
R21
KANTEL_3V3
KANTEL
R22
0
100k
R23
KANTER_3V3
KANTER
R24
0
100k
R25
FERNBED_3V3
FERNBED
R28
0
47k
R29
RADL_3V3
RADL
R30
2k2
3k9
R31
RADR_3V3
RADR
R32
2k2
3k9
R33
KLAPPE_3V3
KLAPPE
R34
100k
180k
R35
GND
+3V3
4k7
R1
4k7
R2
U2
BSS138
U3
BSS138
SDA2
SCL2
+5V
10k
R3
10k
R4
SDA2_5V
SCL2_5V
+5V
J3
RESET
CS1
MOSI1
MISO1
SCK1
POW3
GND
SPI_1
+5V
J2
SDA2_5V
SCL2_5V
GND
I2C_2
+3V3
J5
SDA0
SCL0
GND
I2C_0
J4
A22_DAC1
A21_DAC0
SERVO3_FB
SERVO2_FB
Erw_analog
+3V3
J9
BPS_3V3
GND
BPS
J1
RADL1
RADL
RADL2
RADL
+5V
IC2
AVCC
VCC
~RESET
XTAL1
AREF
PA0
PA1
PA2
PA3
PA4
PA5
PA6
PA7
PB0
PB1
PB2
PB3
PB4
PB5
PB6
PB7
GND_2
GND
XTAL2
PC0
PC1
PC2
PC3
PC4
PC5
PC6
PC7
PD0
PD1
PD2
PD3
PD4
PD5
PD6
PD7
ABSTL
ABSTR
MLINKS
MRECHTS
LDRL
LDRR
KANTEL
KANTER
SCHRANKE
FERNBED
PWM1
RADL1
SDIO_5V
MAUS_CLK
CS2
GPIO42
GPIO41
GPIO40
RADL2
MOT_L_DIR
MOT_R_DIR
RX2
TX2
RADR
MOT_R_PWM
MOT_L_PWM
KLAPPE
PWM2
GND
ATMEGA1284P
+3V3
R38
10k
U1
BSS138
MAUS_D_3V3
+5V
R39
10k
SDIO_5V
+3V3
IC1
TEENSY 3.6
3V3(1)*4
G0*7
3V3
GND
0/RX1/MOSI1/T
1/TX1/MISO1/T
2/PWM
3/PWM/SCL2/CAN0TX
4/PWM/SDA2/CAN0RX
5/PWM/ALT-TX1/ALT-MISO1
6/PWM
7/PWM/RX3/ALT-SCL0/ALT-MOSI0
8/PWM/TX3/ALT-SDA0/ALT-MISO0
9/PWM/RX2/CS0-1
10/PWM/TX2/CS0-0
11/MOSI0
12/MISO0
13/LED/ALT-PWM/SCK0
14/A0/PWM/ALT-SCK0
15/A1/CS0-4/T
16/A2/PWM/T/ALT-SCL0
17/A3/PWM/T/ALT-SDA0
18/A4/PWM/T/SDA0
19/A5/PWM/T/SCL0
20/A6/PWM/CS0-2/ALT-SCK1
21/A7/PWM/CS0-3/ALT-MOSI1/ALT-RX1
22/A8/PWM/T
23/A9/PWM/T
24
25
26/ALT-PWM/ALT-TX1/ALT-SCL2
27/ALT-RX1/ALT-SCK0
28/ALT-MOSI0
29/PWM/T/ALT-CAN0TX
30/PWM/T/ALT-CAN0RX
31/A12/PWM/RX4/CS1-0
32/A13/PWM/TX4/SCK1
33/A14/CAN1TX/TX5/ALT-SCL0
34/A15/CAN1RX/RX5/ALT-SDA0
35/A16/PWM
36/A17/PWM
5V
D-
D+
VUSB
VIN
DE
DC
DD
VBAT
RESET
PROGRAM
A11
A10
AREF
AGND
DAC1
DAC0
57/SCL3
56/SDA3
55
54/CS2-1
53/PWM/SCK2
52/MOSI2
51/MISO2
50/A24/PWM
49/A23/PWM
48/SDA0/TX6
47/SCL0/RX6
46/SCK2
45/CS0-5/MISO2
44/MOSI2
43/CS2-0
42
41
40
39/A20/ALT-MISO0
38/A19/PWM/SDA1
37/A18/PWM/SCL1
MOSI1
MISO1
PWM_ERW
SCL2
SDA2
PWM1
PWM2
SCL0
SDA0
RX2
TX2
MOSI0
MISO0
SCK0
CS0
KANTEL_3V3
KANTER_3V3
MLINKS_3V3
MRECHTS_3V3
PWM3
PWM4
PWM5
PWM6
RADL_3V3
RADR_3V3
TX1
RX1
FERNBED_3V3
MOT_L_DIR
MOT_R_DIR
CS1
SCK1
TX5
RX5
MOT_L_PWM
MOT_R_PWM
V_USB
RESET
ABSTL_3V3
ABSTR_3V3
A22_DAC1
A21_DAC0
SCL3
SDA3
KLAPPE_3V3
SCHRANKE_3V3
MAUS_D_3V3
MAUS_CLK
BPS_3V3
SERVO3_FB
SERVO2_FB
TX6
RX6
SCK2
MISO2
MOSI2
CS2
GPIO42
GPIO41
GPIO40
BAT_IN_FB
LDRR_3V3
LDRL_3V3
+5V
C1
100nF
C2
220uF
GND
SPI_0
J8
Erw_PWM
J6
Uart_5
J7
POW3
100k
R40
BAT_IN_FB
R42
1k
22k
R41
D1
BAV99
+3V3
GND
GND