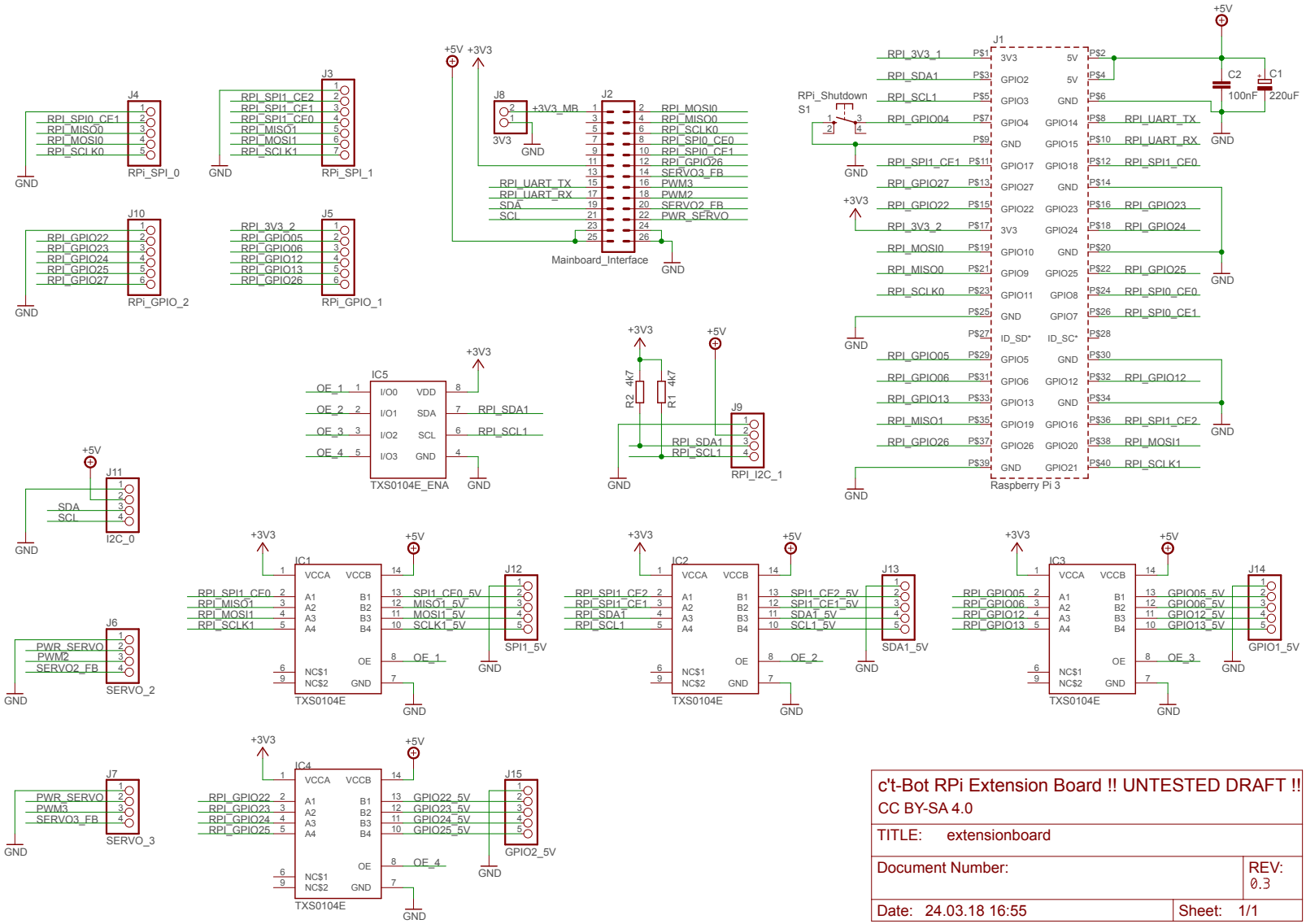

c't-Bot RPi Extension Board !! UNTESTED DRAFT !!

CC BY-SA 4.0

TITLE: extensionboard

Document Number:

REV: 0.3

Date: 24.03.18 16:55

Sheet: 1/1