南方科技大学
SOUTHERN UNIVERSITY OF SCIENCE AND TECHNOLOGY

计算机组成原理
COMPUTER ORGANIZATION

本课件内容参考自David A. Patterson与John L. Hennessy的教材《Computer Organization and Design: The Hardware/Software Interface》官方配套课件。

zhangj4@sustech.edu.cn

Lecture 10

Instruction-Level Parallelism

zhangj4@sustech.edu.cn

Outline

- Instruction Level Parallelism
- Static Multiple Issue
- Dynamic Multiple Issue
- Real Stuff: The ARM Cortex-A53 and Intel Core i7 Pipelines

Instruction-Level Parallelism Techniques

zhangj4@sustech.edu.cn

Instruction-Level Parallelism (ILP)

- Instruction-level parallelism: parallelism among instructions
  - Pipelining is one type of ILP: because pipeline executes multiple instructions in parallel
- To increase ILP
  - Deeper pipeline
    - Less work per stage ⇒ shorter clock cycle
  - Multiple issue(多发射)
    - Replicate pipeline datapath ⇒ multiple pipelines
    - Start multiple instructions per clock cycle
    - $CPI_{overall} < 1$, so use Instructions Per Cycle (IPC)
    - E.g., 4-way multiple-issue
      - peak CPI = 0.25, peak IPC = 4
    - But dependencies reduce this in practice

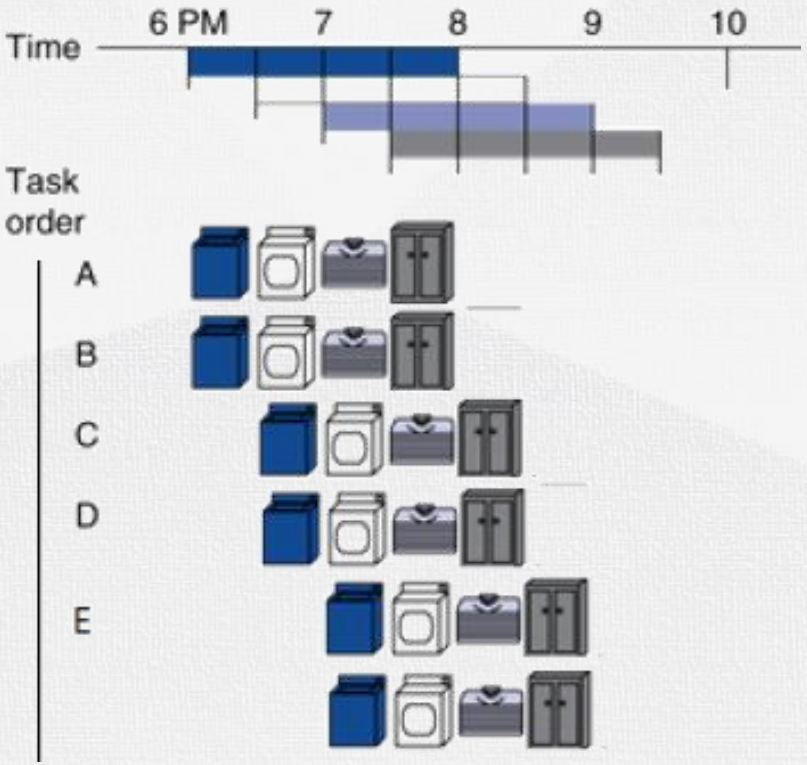

Multiple Issue

- Static multiple issue (decision made by compiler)
  - Compiler groups instructions to be issued together
  - Packages them into “issue slots”
  - Compiler detects and avoids hazards
- Dynamic multiple issue (decision made by processor)
  - CPU examines instruction stream and chooses instructions to issue each cycle
  - Compiler can help by reordering instructions
  - CPU resolves hazards using advanced techniques at runtime

Static Multiple Issue

Static Multiple Issue

- Compiler groups instructions into "issue packets"
  - Group of instructions that can be issued on a single cycle
  - Determined by pipeline resources required
- Think of an issue packet as a very long instruction
  - Specifies multiple concurrent operations
  - $\Rightarrow$ Very Long Instruction Word (VLIW)

Naïve Static Dual Issue

- A naïve solution: replicate the datapath to issue 2 instructions per cycle.

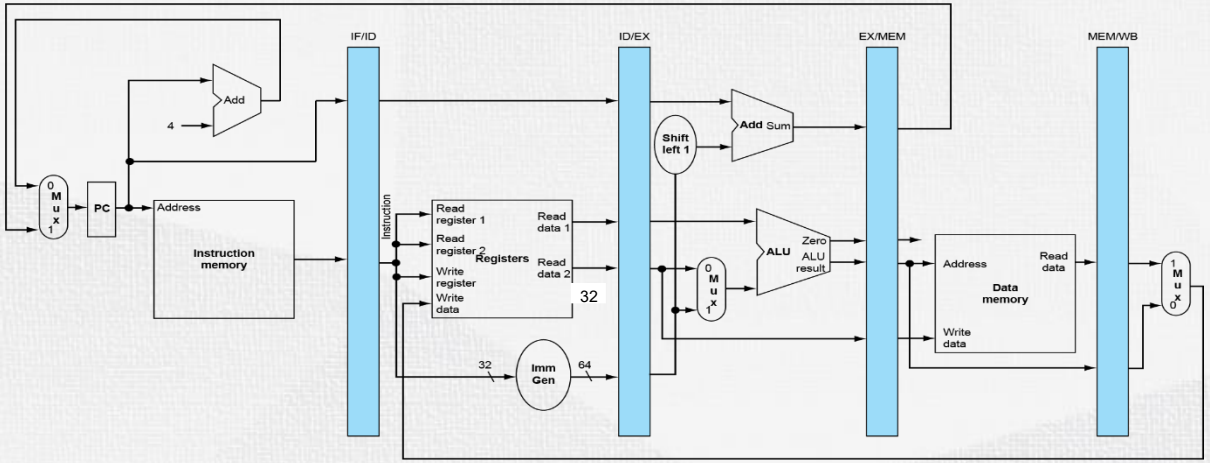

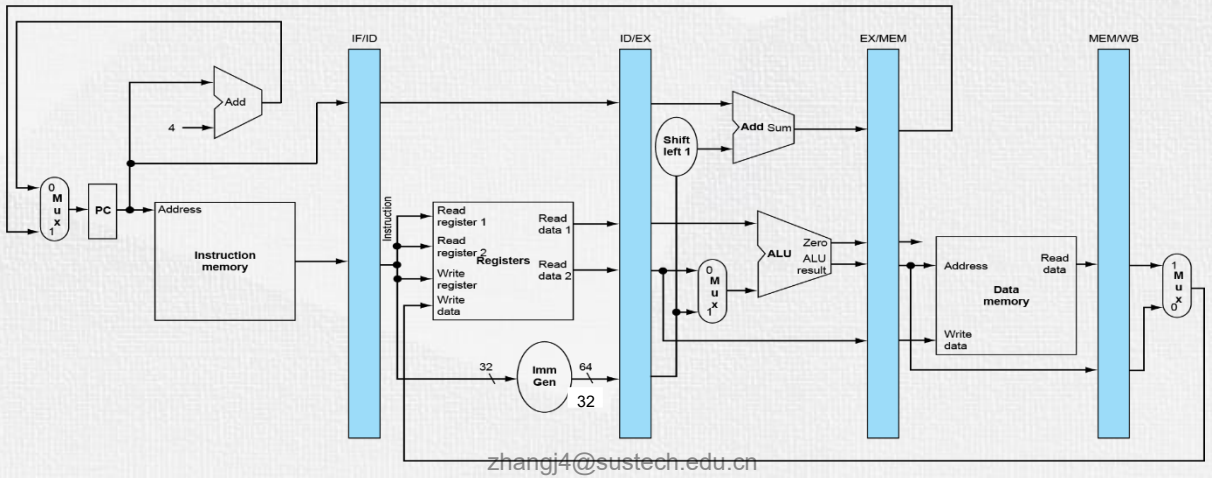

RISC-V with Static Dual Issue

- Two-issue packets
  - Divide instructions into two types:
    - Type1: ALU/branch instruction
    - Type2: load/store instruction
  - During each cycle, execute type1 and type2 inst. simultaneously
  - 64-bit aligned instructions (Pad an unused instruction with nop)

Address	Instruction type	Pipeline Stages						
n	ALU/branch	IF	ID	EX	MEM	WB		
n + 4	Load/store	IF	ID	EX	MEM	WB		
n + 8	ALU/branch		IF	ID	EX	MEM	WB	
n + 12	Load/store		IF	ID	EX	MEM	WB	
n + 16	ALU/branch			IF	ID	EX	MEM	WB
n + 20	Load/store			IF	ID	EX	MEM	WB

RISC-V with Static Dual Issue

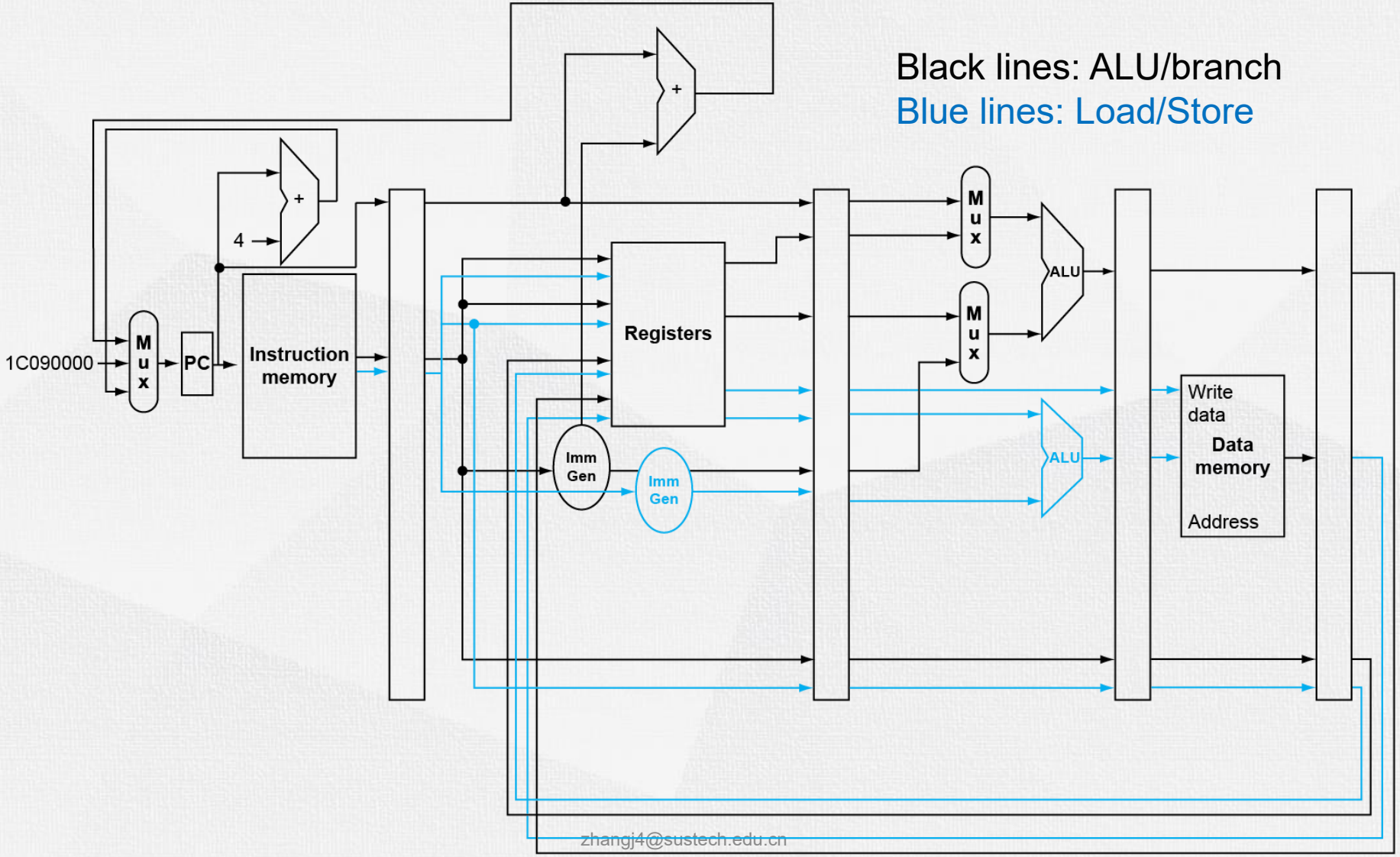

Hazards in the Dual-Issue RISC-V

- More instructions executing in parallel
- EX data hazard
  - Forwarding avoided stalls with single-issue
  - Now can't use ALU result in load/store in same packet
    - ```
      add  t0, s0, s1
      lw   s2, 0(t0)
      ```
    - Split into two packets, effectively a stall
- Load-use hazard
  - Still one cycle use latency (number of clock cycles between load and use), but now two instructions
- More aggressive scheduling required
      ```

Scheduling Static Multiple Issue

- Compiler must remove some/all hazards
  - Reorder instructions into issue packets
  - No dependencies within a packet
  - Possibly some dependencies between packets
    - Varies between ISAs; compiler must know!
  - Pad with nop if necessary

Scheduling Example

- Schedule this for dual-issue RISC-V

```
Loop: lw   t0, 0(s1)        # t0=array element
      add  t0, t0, s2       # add scalar in s2
      sw   t0, 0(s1)        # store result
      addi s1, s1,-4        # decrement pointer
      bge  s1, zero, Loop # branch s1>=0
```

	ALU/branch	Load/store	cycle
Loop:		lw t0, 0(s1)	1
			2
			3
			4

Note: assuming forwarding is automatically used and there's 1 cycle load-use latency

Scheduling Example

- Schedule this for dual-issue RISC-V

```
Loop: lw   t0, 0(s1)        # t0=array element
      add  t0, t0, s2       # add scalar in s2
      sw   t0, 0(s1)        # store result
      addi s1, s1,-4        # decrement pointer
      bge  s1, zero, Loop # branch s1>=0
```

	ALU/branch	Load/store	cycle
Loop:		lw t0, 0(s1)	1
			2
	add t0, t0, s2		3
			4

Scheduling Example

- Schedule this for dual-issue RISC-V

```
Loop: lw   t0, 0(s1)        # t0=array element
      add  t0, t0, s2       # add scalar in s2
      sw   t0, 0(s1)        # store result
      addi s1, s1,-4        # decrement pointer
      bge  s1, zero, Loop # branch s1>=0
```

	ALU/branch	Load/store	cycle
Loop:		lw t0, 0(s1)	1
			2
	add t0, t0, s2		3
		sw t0, 0(s1)	4

Scheduling Example

- Schedule this for dual-issue RISC-V

```
Loop: lw   t0, 0(s1)        # t0=array element
      add  t0, t0, s2       # add scalar in s2
      sw   t0, 0(s1)        # store result
      addi s1, s1,-4        # decrement pointer
      bge  s1, zero, Loop # branch s1>=0
```

	ALU/branch	Load/store	cycle
Loop:		lw t0, 0(s1)	1
	addi s1, s1,-4		2
	add t0, t0, s2		3
		sw t0, 4(s1)	4

bring addi to cycle 2 to avoid stall, but need to adjust sw offset

Scheduling Example

- Schedule this for dual-issue RISC-V

```
Loop: lw   t0, 0(s1)        # t0=array element
      add  t0, t0, s2       # add scalar in s2
      sw   t0, 0(s1)        # store result
      addi s1, s1,-4        # decrement pointer
      bge  s1, zero, Loop # branch s1>=0
```

	ALU/branch	Load/store	cycle
Loop:		lw t0, 0(s1)	1
	addi s1, s1,-4		2
	add t0, t0, s2		3
	bge s1, zero, Loop	sw t0, 4(s1)	4

Scheduling Example

- Schedule this for dual-issue RISC-V

```
Loop: lw   t0, 0(s1)        # t0=array element
      add  t0, t0, s2       # add scalar in s2
      sw   t0, 0(s1)        # store result
      addi s1, s1,-4        # decrement pointer
      bge  s1, zero, Loop # branch s1>=0
```

	ALU/branch	Load/store	cycle
Loop:	nop	lw t0, 0(s1)	1
	addi s1, s1,-4	nop	2
	add t0, t0, s2	nop	3
	bge s1, zero, Loop	sw t0, 4(s1)	4

Note: addi can also be place in cycle 1

IPC = 5/4 = 1.25 (c.f. peak IPC = 2)

Loop Unrolling

- "Name dependence" or "anti-dependence"
  - Repeated instance of

```
for (i=7; i >= 0;i--)
a[i]=a[i]+5;
```

```
Loop: lw   t0, 0(s1)
      add  t0, t0, s2
      sw   t0, 0(s1)
      addi s1, s1,-4
      bge  s1, zero, Loop
```

```
a[7]=a[7]+5;
a[6]=a[6]+5;
a[5]=a[5]+5;
a[4]=a[4]+5;
...
```

  - The data are independent, no data flow between two sets
  - Dependence comes from the reuse of the register name
- We use "loop unrolling" to remove "name dependence"
  - Replicate loop body to expose more parallelism
  - Use different registers per replication (called "register renaming")
  - Reduces loop-control overhead

Loop Unrolling Example

- Repeat the code in the loop (assuming loop 4 times)

lw t0, 0(s1)
add t0, t0, s2
sw t0, 0(s1)
	lw t1, -4(s1)
	add t1, t1, s2
	sw t1, -4(s1)
		lw t2, -8(s1)
		add t2, t2, s2
		sw t2, -8(s1)
			lw t3, -12(s1)
			add t3, t3, s2
			sw t3, -12(s1)

	ALU/branch	Load/store	cycle
Loop:	addi s1, s1,-16	lw t0, 0(s1)	1
			2
	add t0, t0, s2		3
		sw t0, 16(s1)	4
			5
			6
			7
			8

Loop Unrolling Example

- Repeat the code in the loop (assuming loop 4 times)

lw t0, 0(s1)
add t0, t0, s2
sw t0, 0(s1)
	lw t1, -4(s1)
	add t1, t1, s2
	sw t1, -4(s1)
		lw t2, -8(s1)
		add t2, t2, s2
		sw t2, -8(s1)
			lw t3, -12(s1)
			add t3, t3, s2
			sw t3, -12(s1)

	ALU/branch	Load/store	cycle
Loop:	addi s1, s1,-16	lw t0, 0(s1)	1
	nop	lw t1, 12(s1)	2
	add t0, t0, s2		3
	add t1, t1, s2	sw t0, 16(s1)	4
		sw t1, 12(s1)	5
			6
			7
			8

Loop Unrolling Example

- Repeat the code in the loop (assuming loop 4 times)

lw t0, 0(s1)
add t0, t0, s2
sw t0, 0(s1)
	lw t1, -4(s1)
	add t1, t1, s2
	sw t1, -4(s1)
		lw t2, -8(s1)
		add t2, t2, s2
		sw t2, -8(s1)
			lw t3, -12(s1)
			add t3, t3, s2
			sw t3, -12(s1)

	ALU/branch	Load/store	cycle
Loop:	addi s1, s1,-16	lw t0, 0(s1)	1
	nop	lw t1, 12(s1)	2
	add t0, t0, s2	lw t2, 8(s1)	3
	add t1, t1, s2	lw t3, 4(s1)	4
	add t2, t2, s2	sw t0, 16(s1)	5
	add t3, t4, s2	sw t1, 12(s1)	6
	nop	sw t2, 8(s1)	7
	bge s1, zero, Loop	sw t3, 4(s1)	8

zhangj4@sustech.edu.cn

Loop Unrolling Example

- IPC = 14/8 = 1.75
  - Closer to 2, but at cost of registers and code size
- How about we loop 3 or 5 iterations, instead of 4?
  - 11/6 if it's 3, 17/10 if it's 5

	ALU/branch	Load/store	cycle
Loop:	addi s1, s1,-16	lw t0, 0(s1)	1
	nop	lw t1, 12(s1)	2
	add t0, t0, s2	lw t2, 8(s1)	3
	add t1, t1, s2	lw t3, 4(s1)	4
	add t2, t2, s2	sw t0, 16(s1)	5
	add t3, t4, s2	sw t1, 12(s1)	6
	nop	sw t2, 8(s1)	7
	bge s1, zero, Loop	sw t3, 4(s1)	8

zhangj4@sustech.edu.cn

Dynamic Multiple Issue

Dynamic Multiple Issue

- "Superscalar" processors
  - An advanced pipelining techniques that enables the processor to execute more than one instruction per clock cycle **by selecting them during execution**.
- CPU decides whether to issue 0, 1, 2, … each cycle
  - Avoiding structural and data hazards
- Avoids the need for compiler scheduling
  - Though it may still help
  - Code semantics ensured by the CPU

Dynamic Pipeline Scheduling

- Allow the CPU to execute instructions out of order to avoid stalls
  - But commit result to registers in order
- Example

```
lw   x31,20(x21)
add  x1,x31,x2
sub  x23,x23,x3
andi x5,x23,20
```

  - Can start sub while add is waiting for ld

Dynamically Scheduled CPU

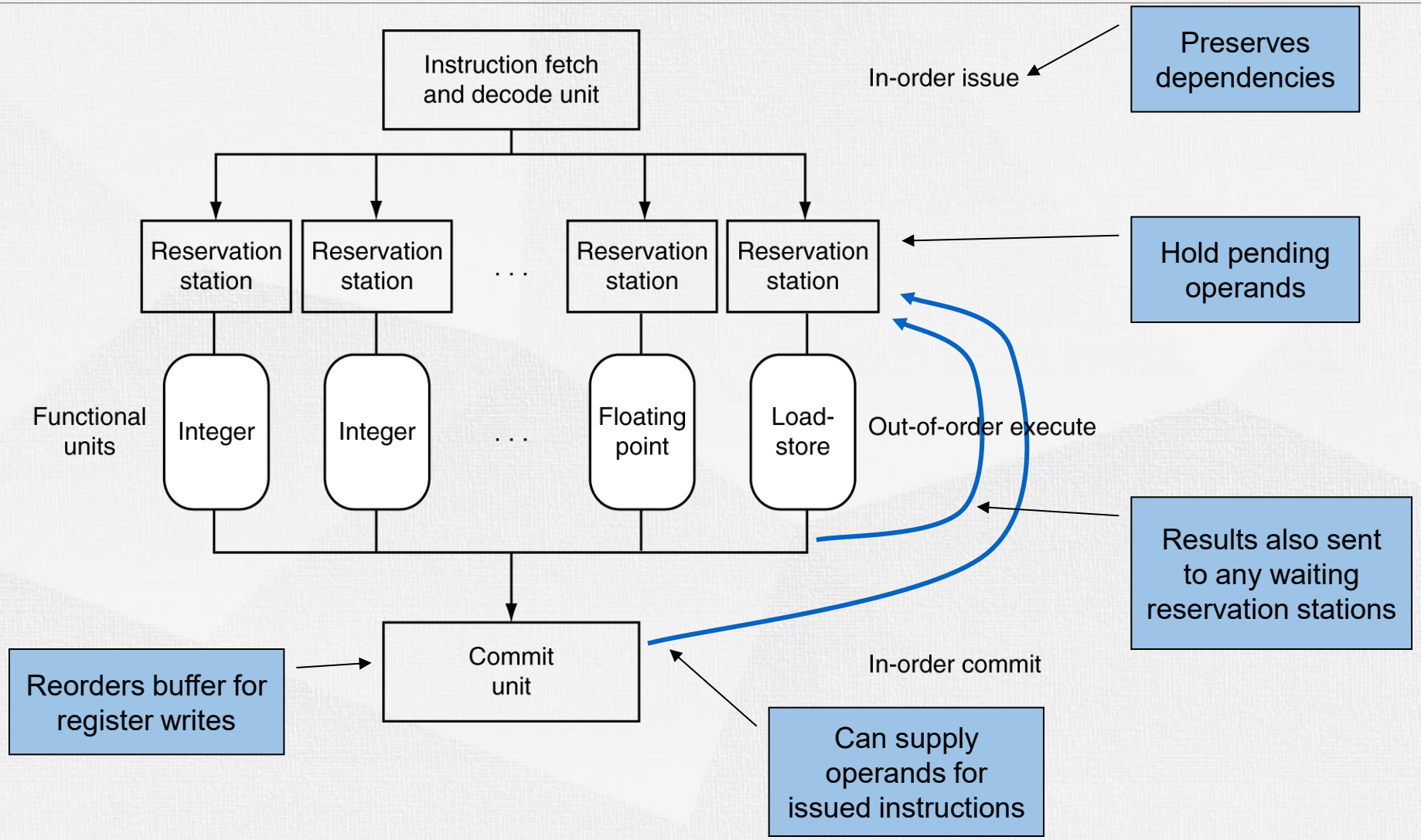

Register Renaming

- Reservation stations and reorder buffer effectively provide register renaming
- On instruction issue to reservation station
  - If operand is available in register file or reorder buffer
    - Copied to reservation station
    - No longer required in the register; can be overwritten
  - If operand is not yet available
    - It will be provided to the reservation station by a function unit
    - Register update may not be required

Why Do Dynamic Scheduling?

- Why not just let the compiler schedule code?
- Not all stalls are predicable
  - e.g., cache misses
- Can’t always schedule around branches
  - Branch outcome is dynamically determined
- Different implementations of an ISA have different latencies and hazards

Speculation

- “Guess” what to do with an instruction
  - Start operation as soon as possible
  - Check whether guess was right
    - If so, complete the operation
    - If not, roll-back and do the right thing
- Common to static and dynamic multiple issue
- Examples
  - Speculate on branch outcome
    - Roll back if path taken is different
  - Speculate on load
    - Avoid load and cache miss delay
    - Roll back if location is updated

Compiler/Hardware Speculation

- Compiler can reorder instructions
  - e.g., move an instruction across a branch or a load across a store
  - Can include “fix-up” instructions to recover from incorrect guess
- Hardware can look ahead for instructions to execute
  - Buffer results and write to register or memory until it determines they are actually needed
  - Flush buffers on incorrect speculation

Speculation and Exceptions

- What if exception occurs on a speculatively executed instruction?
  - e.g., speculative load before null-pointer check
- Static speculation
  - Can add ISA support for deferring exceptions
- Dynamic speculation
  - Can buffer exceptions until instruction completion (which may not occur)

Does Multiple Issue Work?

- Yes, but not as much as we'd like
- Programs have real dependencies that limit ILP
- Some dependencies are hard to eliminate
  - e.g., pointer aliasing
- Some parallelism is hard to expose
  - Limited window size during instruction issue
- Memory delays and limited bandwidth
  - Hard to keep pipelines full
- Speculation can help if done well

Power Efficiency

- Complexity of dynamic scheduling and speculations requires power
- Multiple simpler cores may be better

Microprocessor	Year	Clock Rate	Pipeline Stages	Issue width	Out-of-order/ Speculation	Cores	Power
i486	1989	25MHz	5	1	No	1	5W
Pentium	1993	66MHz	5	2	No	1	10W
Pentium Pro	1997	200MHz	10	3	Yes	1	29W
P4 Willamette	2001	2000MHz	22	3	Yes	1	75W
P4 Prescott	2004	3600MHz	31	3	Yes	1	103W
Core	2006	2930MHz	14	4	Yes	2	75W
UltraSparc III	2003	1950MHz	14	4	No	1	90W
UltraSparc T1	2005	1200MHz	6	1	No	8	70W

Summary

- Techniques
  - Static Multiple issue
  - Dynamic Multiple issue
  - VLIW
  - Superscalar
  - Loop unrolling
  - Register renaming
  - Dynamic scheduling
  - Out-of-order execution
  - Speculation

	Static multiple issue	**Dynamic multiple issue**
Decision made by	Compiler (software)	Processor (hardware)
Also called	Very long instruction word (VLIW)	Superscalar
Ways to remove hazard	Loop unrolling Register renaming Speculation	Dynamic scheduling Out-of-order execution Register renaming Speculation

Real Stuff: The ARM Cortex-A53 and Intel Core i7 Pipelines

zhangj4@sustech.edu.cn

Cortex A8 and Intel i7

Processor	ARM A8	Intel Core i7 920
Market	Personal Mobile Device	Server, cloud
Thermal design power	2 Watts	130 Watts
Clock rate	1 GHz	2.66 GHz
Cores/Chip	1	4
Floating point?	No	Yes
Multiple issue?	Dynamic	Dynamic
Peak instructions/clock cycle	2	4
Pipeline stages	14	14
Pipeline schedule	Static in-order	Dynamic out-of-order with speculation
Branch prediction	2-level	2-level
1st level caches/core	32 KiB I, 32 KiB D	32 KiB I, 32 KiB D
2nd level caches/core	128-1024 KiB	256 KiB
3rd level caches (shared)	-	2- 8 MB

ARM Cortex-A8 Pipeline & Performance

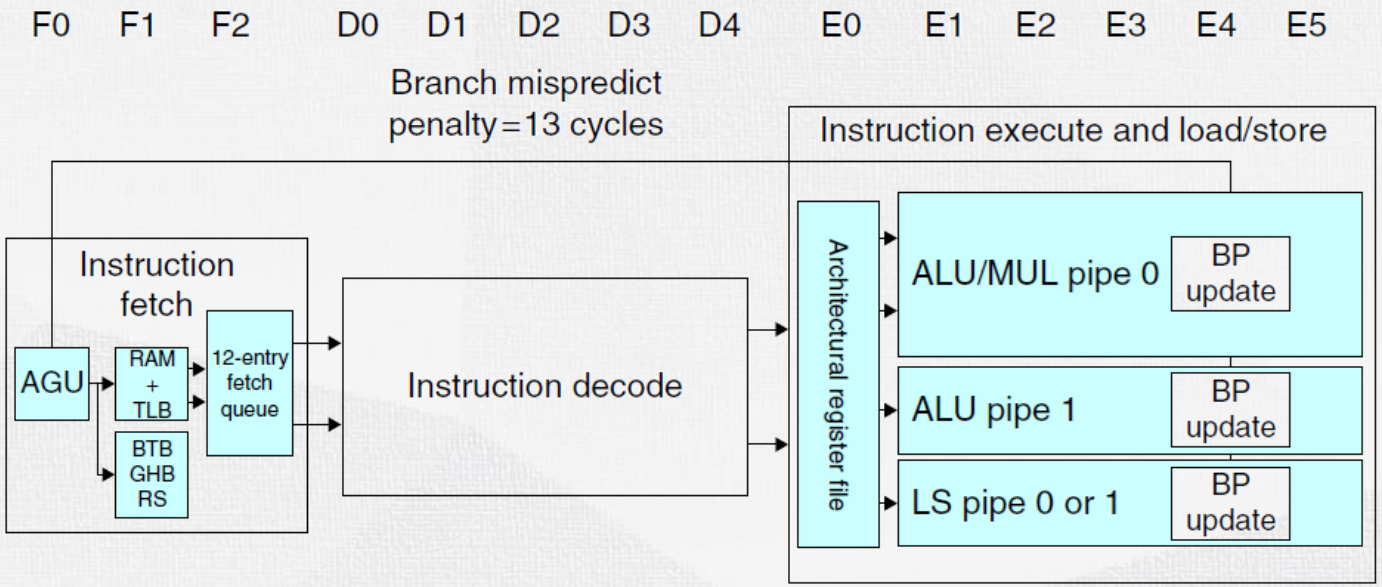

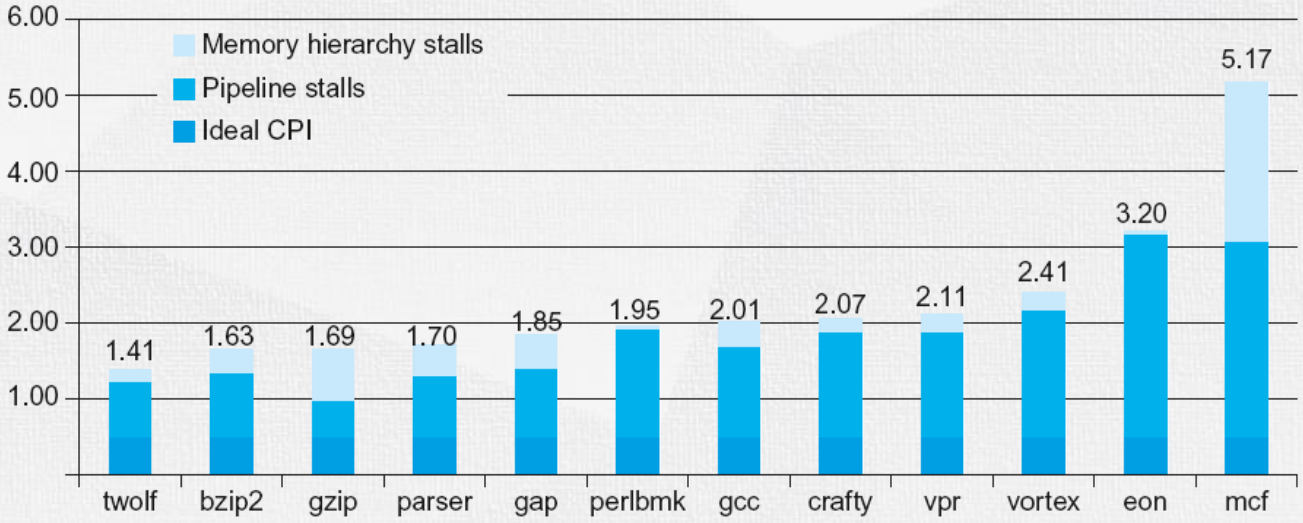

Core i7 Pipeline & Performance

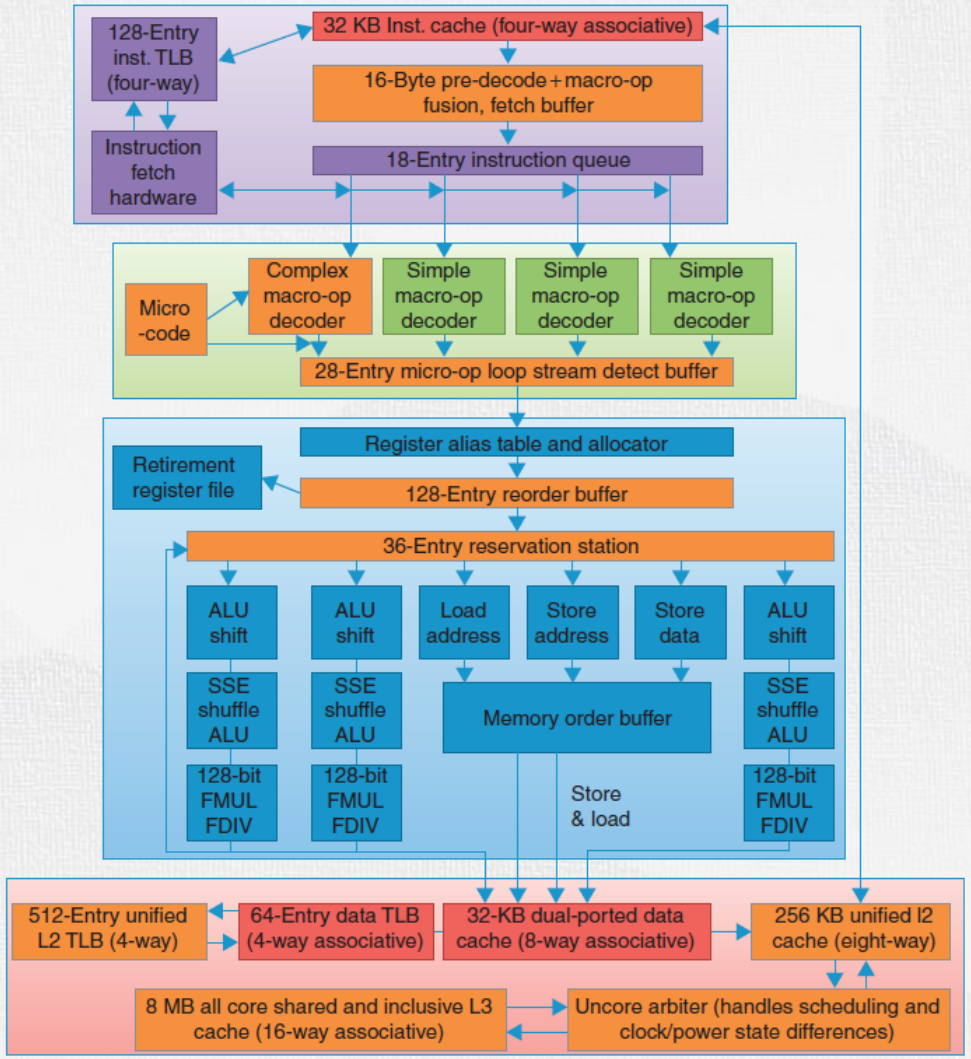

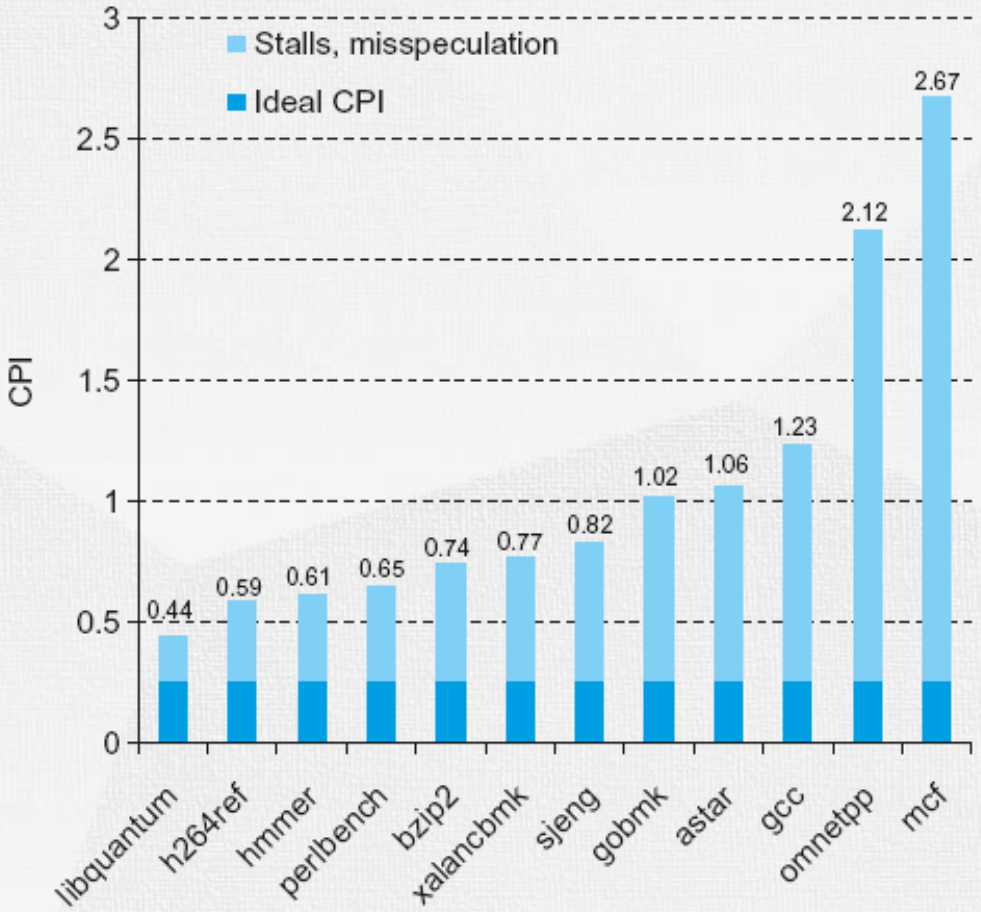

Fallacies

- Pipelining is easy (!)
  - The basic idea is easy
  - The devil is in the details
    - e.g., detecting data hazards
- Pipelining is independent of technology
  - So why haven't we always done pipelining?
  - More transistors make more advanced techniques feasible
  - Pipeline-related ISA design needs to take account of technology trends

Pitfalls

- Poor ISA design can make pipelining harder
  - e.g., complex instruction sets (VAX, IA-32)
    - Significant overhead to make pipelining work
    - IA-32 micro-op approach
  - e.g., complex addressing modes
    - Register update side effects, memory indirection
  - e.g., delayed branches
    - Advanced pipelines have long delay slots

Concluding Remarks

- ISA influences design of datapath and control
- Datapath and control influence design of ISA
- Pipelining improves instruction throughput using parallelism
  - More instructions completed per second
  - Latency for each instruction not reduced
- Hazards: structural, data, control
- Multiple issue and dynamic scheduling (ILP)
  - Dependencies limit achievable parallelism
  - Complexity leads to the power wall