南方科技大学
SOUTHERN UNIVERSITY OF SCIENCE AND TECHNOLOGY

计算机组成原理
COMPUTER ORGANIZATION

本课件内容参考自David A. Patterson与John L. Hennessy的教材《Computer Organization and Design: The Hardware/Software Interface》官方配套课件。

zhangj4@sustech.edu.cn

Computer Organization

Lecture 9

Pipeline

zhangj4@sustech.edu.cn

Outline

- Pipelining: Basic Concepts
- Pipeline Hazards and Handling

Recap: Single-Cycle CPU

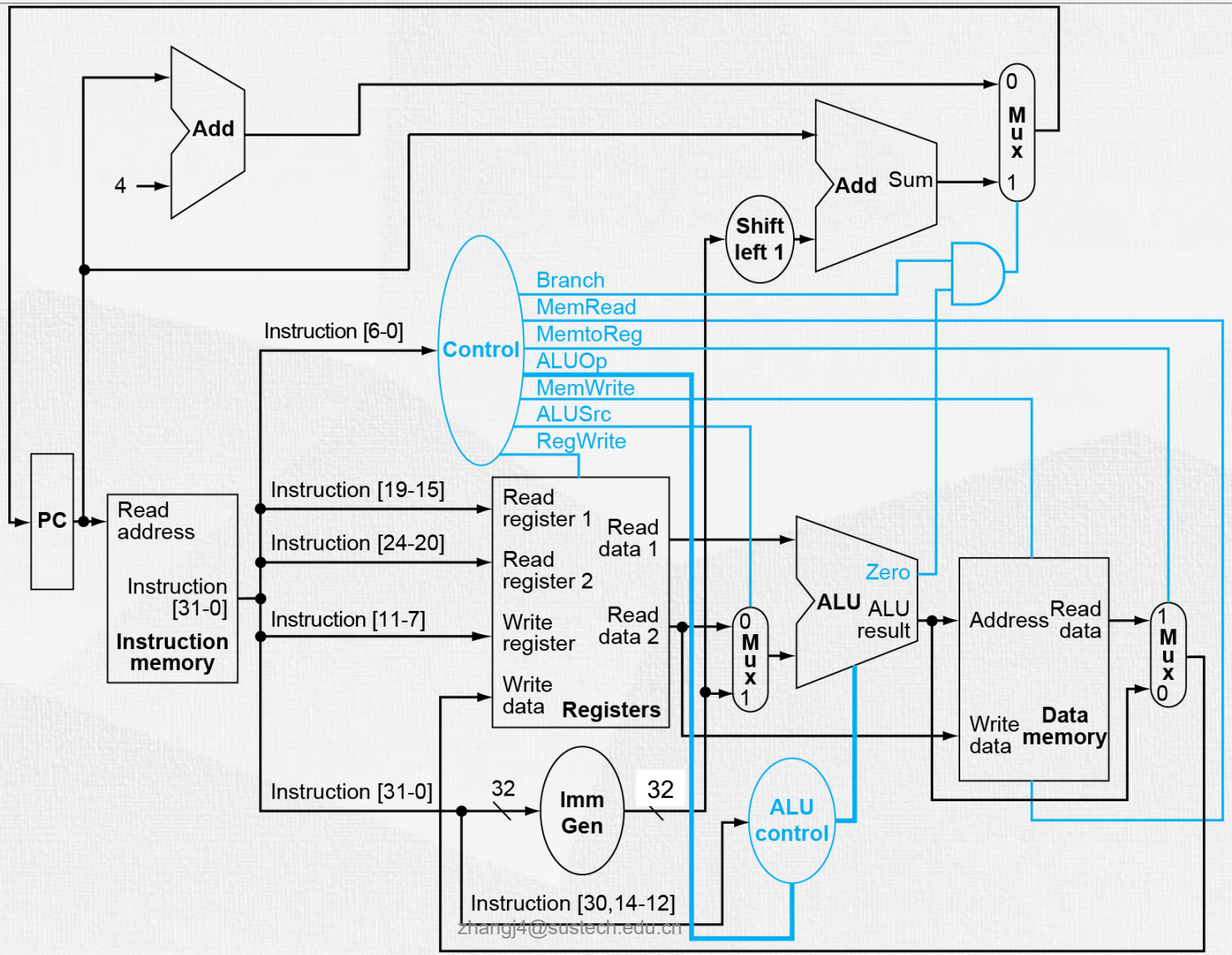

zhangj4@sustech.edu.cn

Instruction Timing – Single Cycle

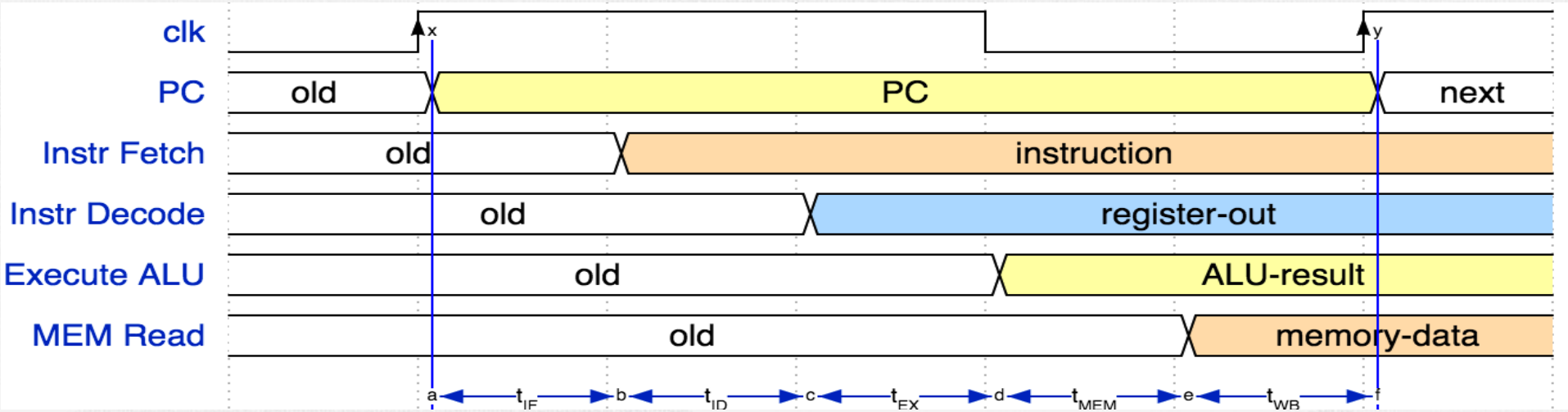

Theoretical modeling(ideal single cycle), which could be slightly different with lab implementation

Example:

IF	ID	EX	MEM	WB	Total
I-MEM	Reg Read	ALU	D-MEM	Reg W	
200 ps	100 ps	200 ps	200 ps	100 ps	800 ps

1. IF: Instruction fetch from memory
2. ID: Instruction decode & register read
3. EX: Execute operation or calculate address
4. MEM: Access memory operand
5. WB: Write result back to register

nathan4@mail.sustech.edu.cn

Performance Issues

Instr	IF = 200ps	ID = 100ps	ALU = 200ps	MEM=200ps	WB = 100ps	Total
add	√	√	√		√	600ps
beq	√	√	√			500ps
lw	√	√	√	√	√	800ps
sw	√	√	√	√		700ps

- Longest delay determines clock period
  - Critical path: load instruction
  - Instruction memory → register file → ALU → data memory → register file
  - Maximum clock rate in the above example
    - f_{max} = 1/800ps = 1.25 GHz
- Most blocks idle most of the time
  - E.g.: How can we keep ALU busy all the time?
  - Idea: Factories use three employee shifts - equipment is always busy! i.e., Pipelining

Solution: Pipeline

- Pipelined laundry: overlapping execution
  - Parallelism improves performance

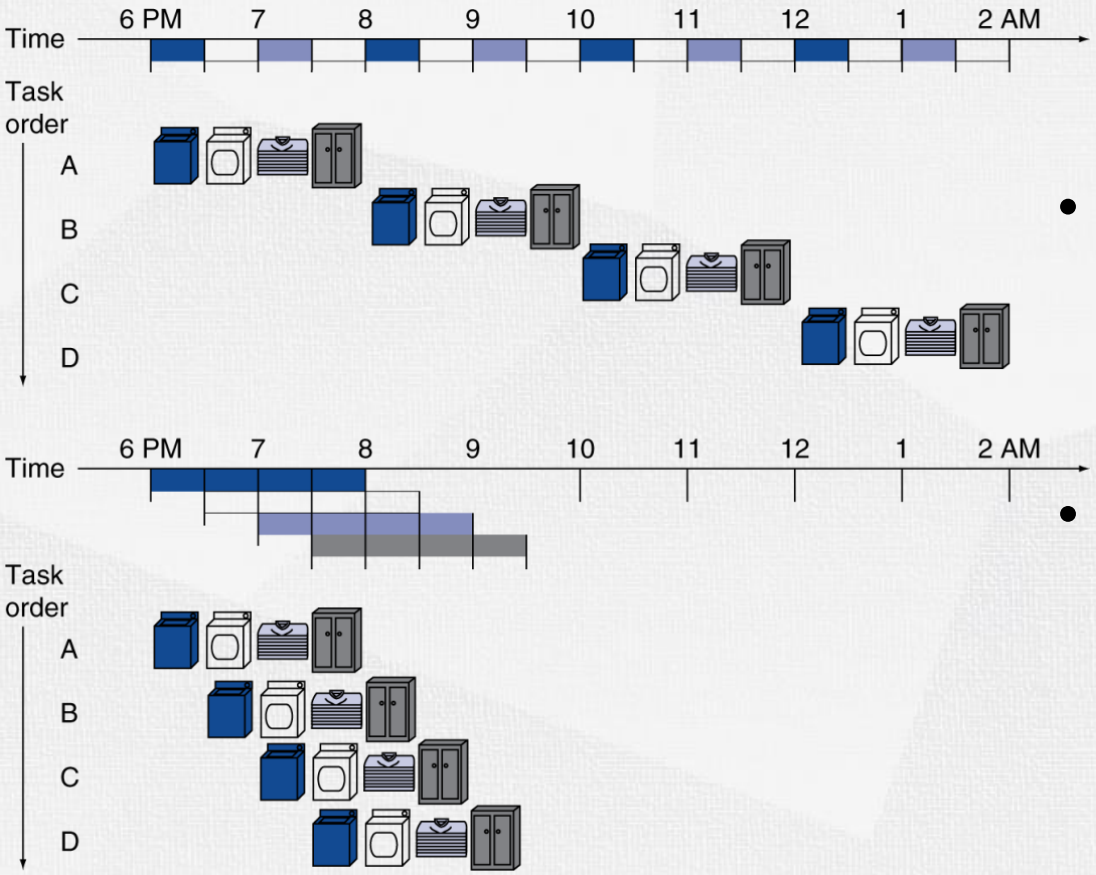

- Four workloads:
  - Speedup
    = 8/3.5 = 2.3
- n tasks:
  - Speedup
    = 2n/(1.5 + 0.5n) ≈ 4
    = number of stages

Pipelined CPU

- Pipeline: an implementation technique in which multiple instructions are overlapped in execution.
- Five stages (IF/ID/EXE/MEM/WB), one step per stage

	Cycle 1	Cycle 2	Cycle 3	Cycle 4	Cycle 5	Cycle 6	Cycle 7	Cycle 8
Instruction 1	IF	ID	EXE	MEM	WB			
Instruction 2		IF	ID	EXE	MEM	WB		
Instruction 3			IF	ID	EXE	MEM	WB	
Instruction 4				IF	ID	EXE	MEM	WB

Pipeline Performance

- Single-cycle: each instruction takes one clock cycle
- Pipelined: each stage takes one clock cycle

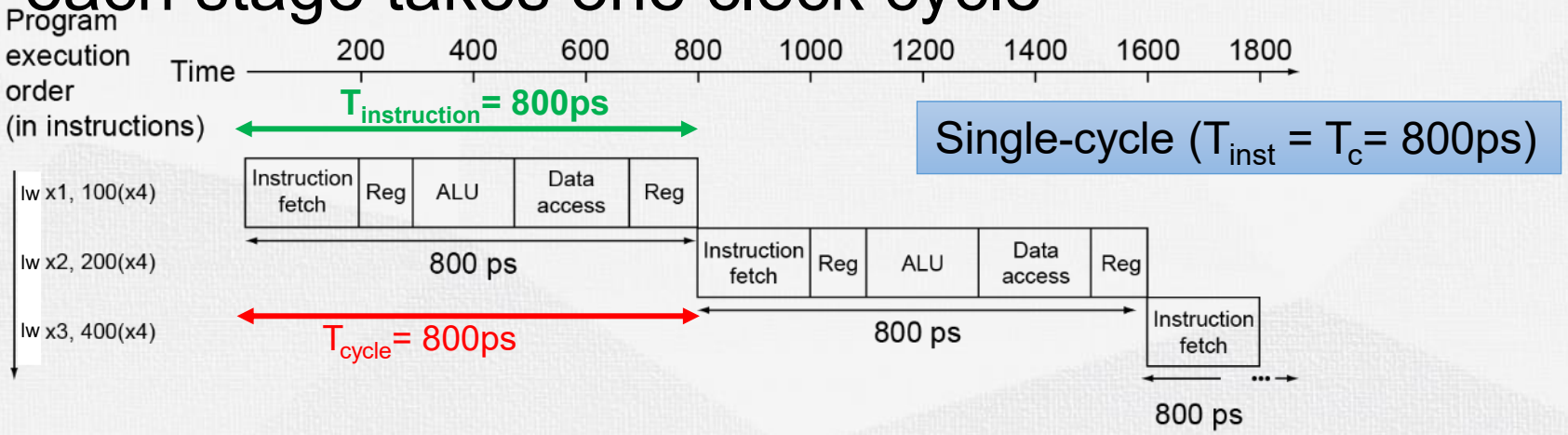

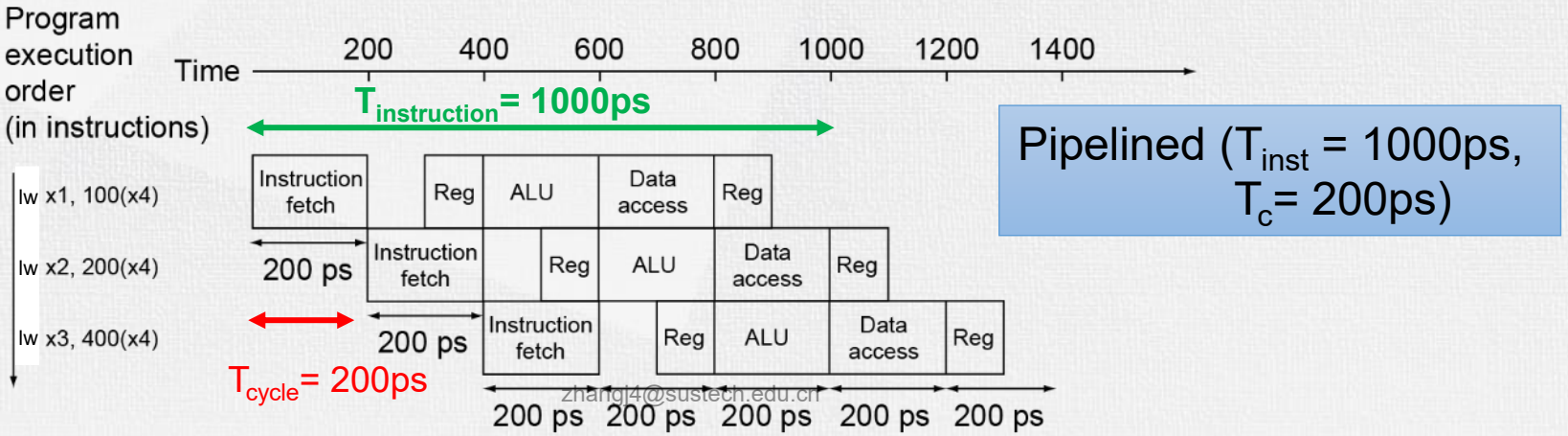

zhangj4@sustech.edu.cn

Pipeline Speedup

- If all stages are balanced
  - i.e., all take the same time

$$\text{Time between instructions}_{\text{pipelined}} = \frac{\text{Time between instructions}_{\text{nonpipelined}}}{\text{Number of stages}}$$

- If not balanced, speedup is less
- Speedup due to **increased throughput**
  - Latency (time for each instruction) does not decrease

Example

- Analysis for previous example
  - where 100ps for register read or write
  - 200ps for other stages

	Single Cycle	Pipelining
stage or cycle time	t_{stage} = 100 or 200 ps (Register access only 100 ps)	t_{cycle} = 200 ps (All cycles same length)
Instruction latency, t_{instr}	= t_{cycle} = 800 ps	= 5*t_{cycle}=1000 ps
Clock rate, freq	1/800 ps = 1.25 GHz	1/200 ps = 5 GHz
Speedup	1 x	4 x

Why only 4x speedup but not 5?

Pipelining and ISA Design

- RISC-V ISA designed for pipelining
  - All instructions are 32-bits
    - Easier to fetch and decode in one cycle
    - c.f. x86: 1- to 17-byte instructions
  - Few and regular instruction formats
    - Can decode and read registers in one step
  - Load/store addressing
    - Can calculate address in 3rd stage, access memory in 4th stage

Pipeline Hazards and Handling

zhangj4@sustech.edu.cn

Hazards

- Situations that prevent starting the next instruction in the next cycle
  - Structure hazards
    - A required resource is busy
  - Data hazard
    - Need to wait for previous instruction to complete its data read/write
  - Control hazard
    - Deciding on control action depends on previous instruction
- Can usually resolve hazards by stall (waiting)
  - pipeline control must detect the hazard
  - and take action to resolve hazards

Structure Hazards

- Conflict for use of a resource
- Instruction and data memory used simultaneously
- In RISC-V, use two separate memories
  - Instruction Mem and Data Mem

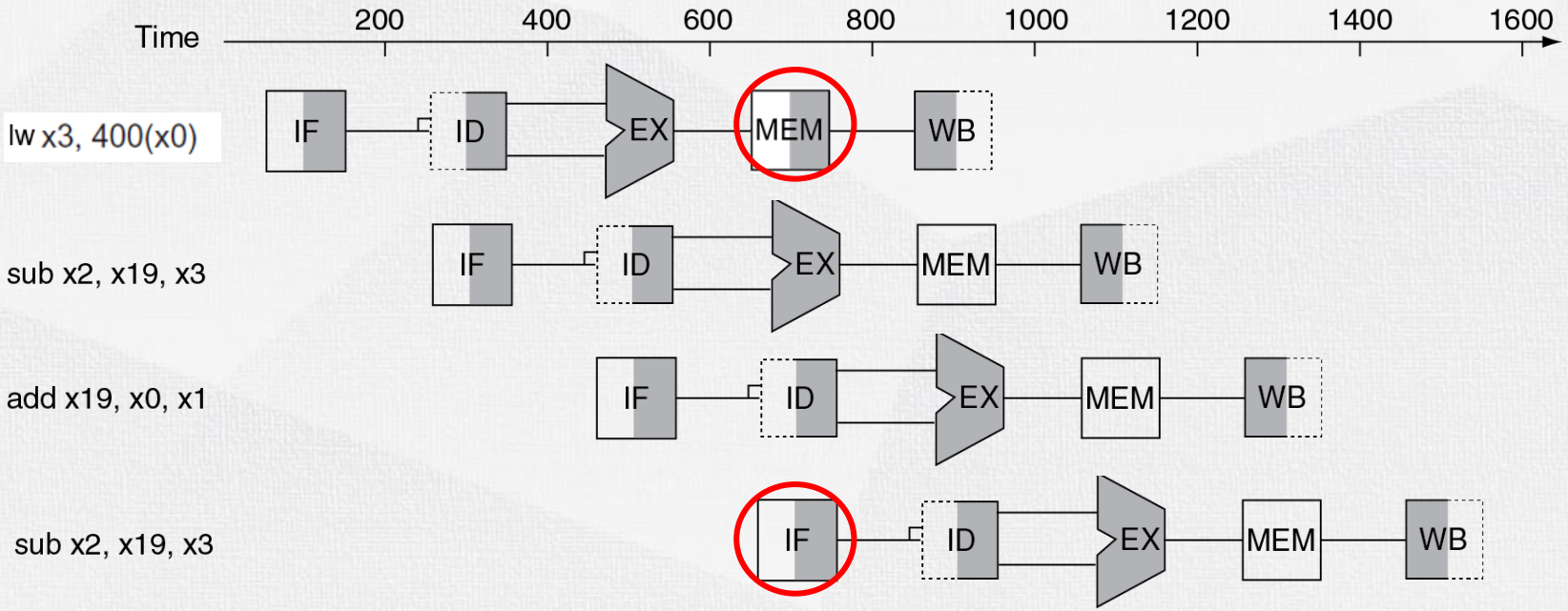

Data Hazards

- When data needed to execute the instruction is not yet available.
  - Register usage
  - Load-Use
- Solution
  - Stall
  - Forwarding
  - Stall + Forwarding
  - Code scheduling

Resolve Data Hazards 1: Stall

- Inserting NOP instructions (stall/bubble)
  - `add x19, x0, x1`
    `sub x2, x19, x3`

```
add   x19, x0, x1
NOP
NOP
NOP
sub   x2, x19, x3
```

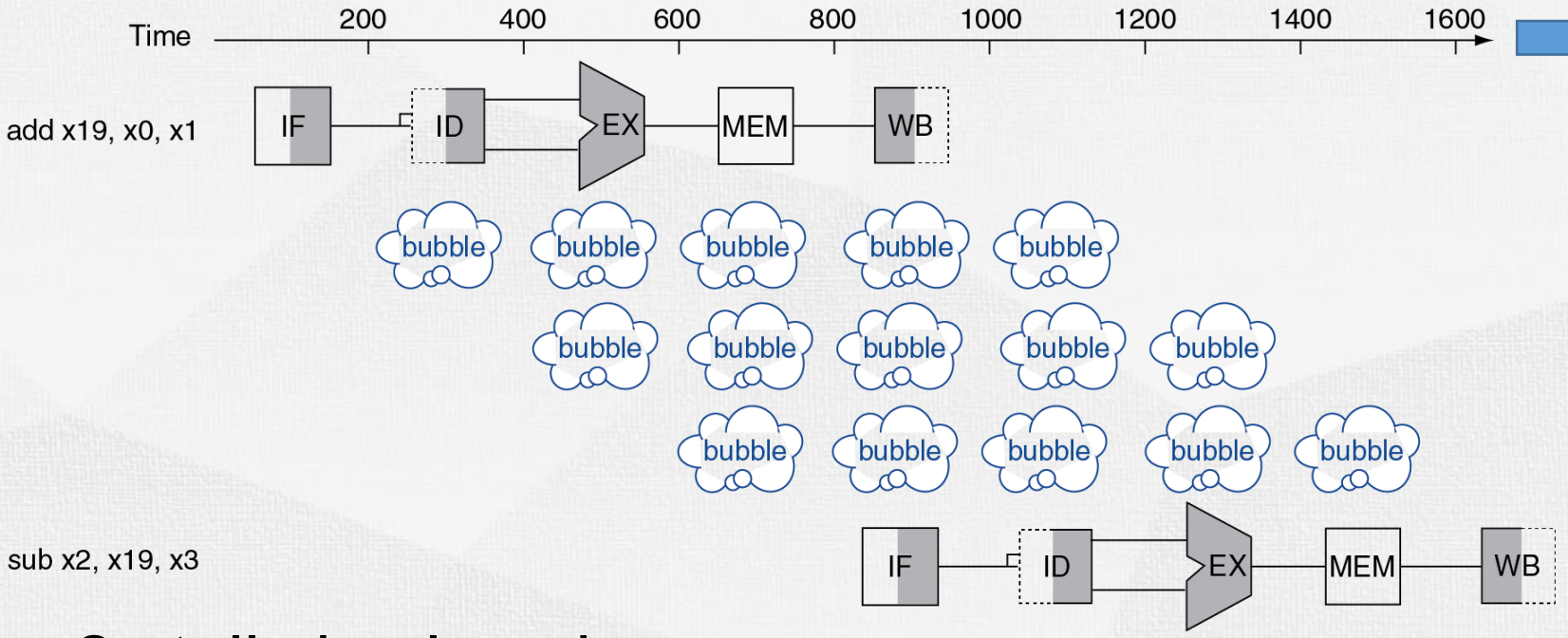

- 2 stalls is also ok
  - right half of ID is shaded because the register file is read
  - left half of WB is shaded because the register file is written

zhangj4@sustech.edu.cn

Resolve Data Hazards 2: Forwarding

- Forwarding can help to solve data hazard
- Core idea: Use result immediately when it is computed
  - Don't wait for it to be stored in a register
  - Requires extra connections in the datapath
  - Add a bypassing line to connect the output of EX to the input

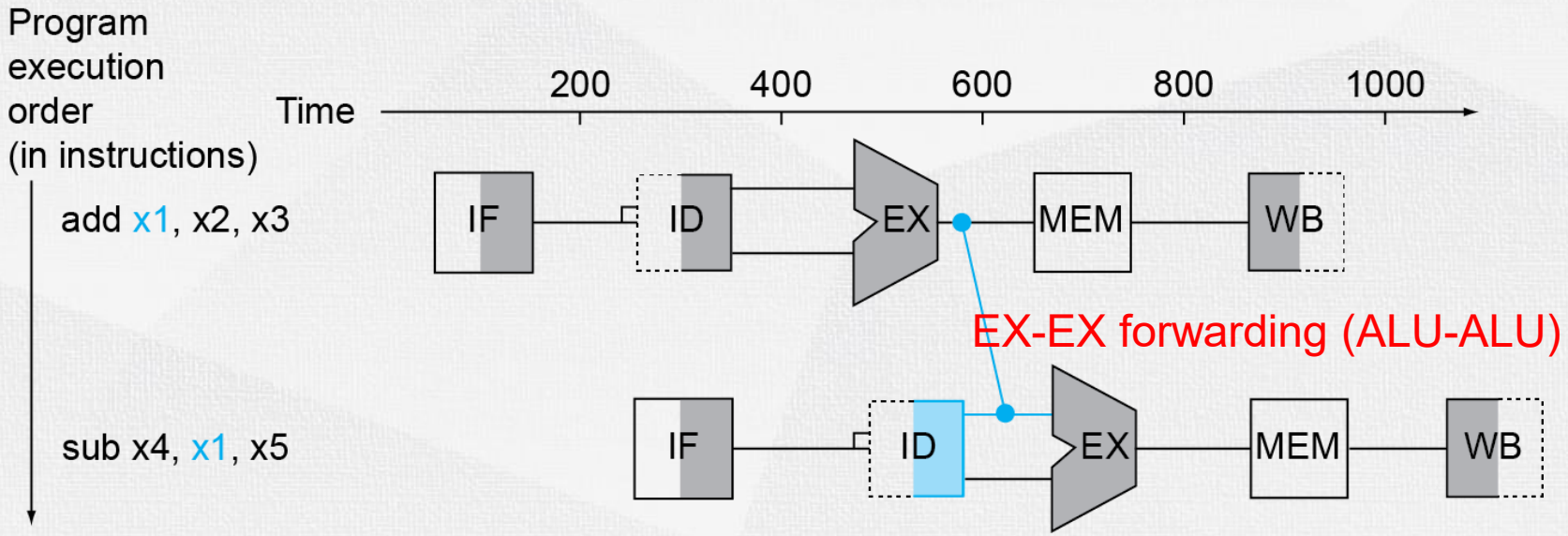

Resolve Data Hazards 3: Stall + forwarding

- For Load-Use Data Hazard, Can't avoid stalls by forwarding
  - If value not computed when needed
  - Can't forward backward in time!
  - E.g. lw x1, 0(x2) sub x4, x1, x5

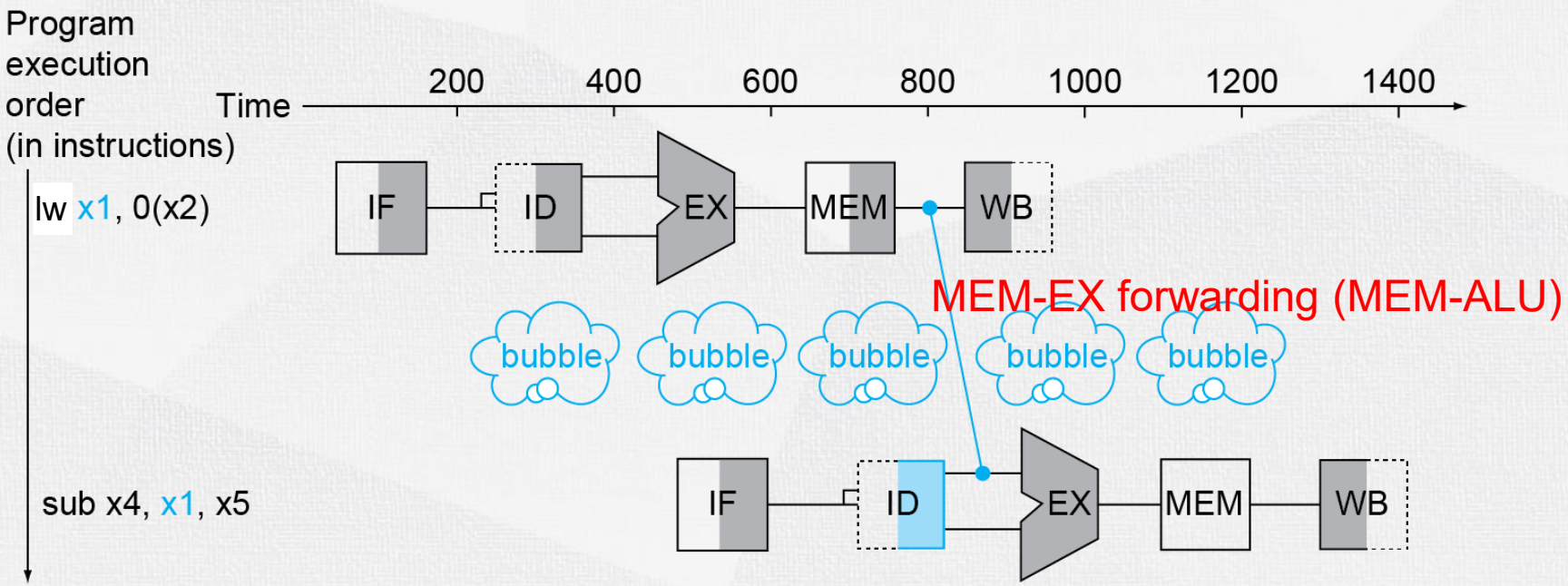

Code Scheduling to Avoid Stalls

- Reorder code to avoid use of load result in the next instruction
- C code for a = b + e; c = b + f;
- (x1:b, x2:e, x3:a, x4:f, x5:c)

stall

stall

```
lw      x1, 0(x0)
lw      x2, 4(x0)
add     x3, x1, x2
sw      x3, 12(x0)
lw      x4, 8(x0)
add     x5, x1, x4
sw      x5, 16(x0)
```

13 cycles

Assume forwarding is available, we still need 2 stalls to resolve data hazard

```
lw      x1, 0(x0)
lw      x2, 4(x0)
lw      x4, 8(x0)
add     x3, x1, x2
sw      x3, 12(x0)
add     x5, x1, x4
sw      x5, 16(x0)
```

11 cycles

Reorder code to avoid stalls

Control Hazards

- Branch determines flow of control
  - Fetching next instruction depends on branch outcome
  - Pipeline can’t always fetch correct instruction
    - Still working on ID stage of branch

- In RISC-V pipeline
  - Need to compare registers and compute target early in the pipeline
  - Add hardware to do it in ID stage

Resolve Control Hazard 1: Stall on Branch

- Wait until branch outcome determined before fetching next instruction
  - Note: we assume extra hardware is added to determine the branch outcome early in ID stage

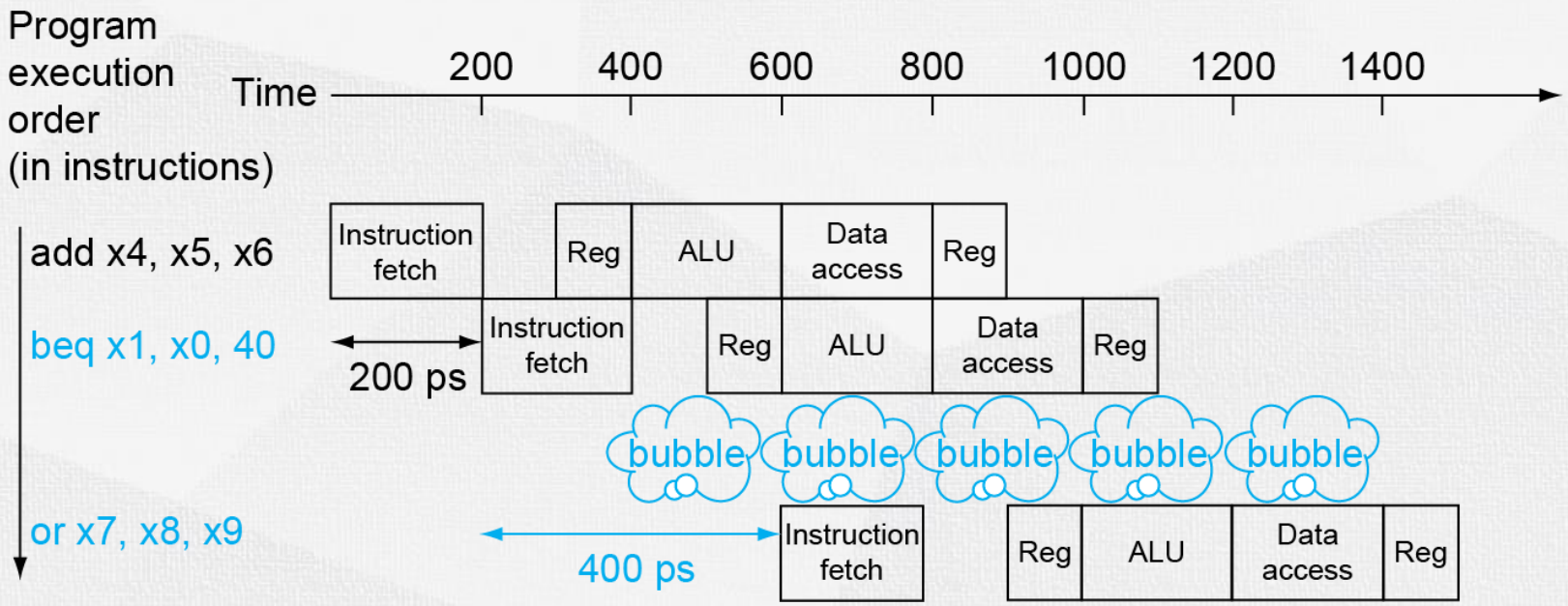

Resolve Control Hazard 2: Branch Prediction

- Longer pipelines can’t readily determine branch outcome early
  - Stall penalty becomes unacceptable
- Predict outcome of branch
  - Only stall if prediction is wrong
- In RISC-V pipeline
  - Can predict branches not taken
  - Fetch instruction after branch, with no delay

RISC-V with Predict Not Taken

Prediction correct

no stall

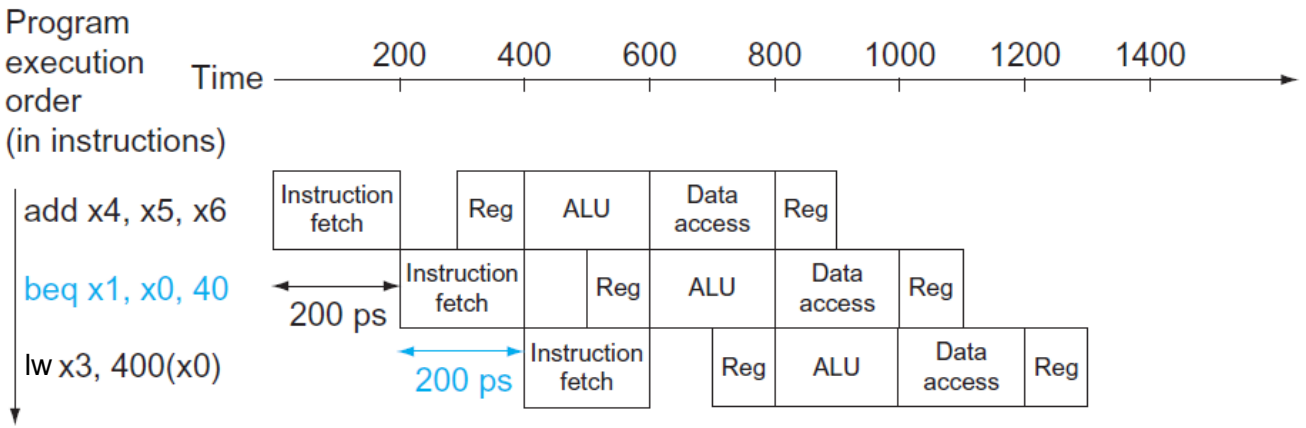

Note: we assume extra hardware is added to determine the branch outcome early in ID stage

Prediction incorrect

one stall

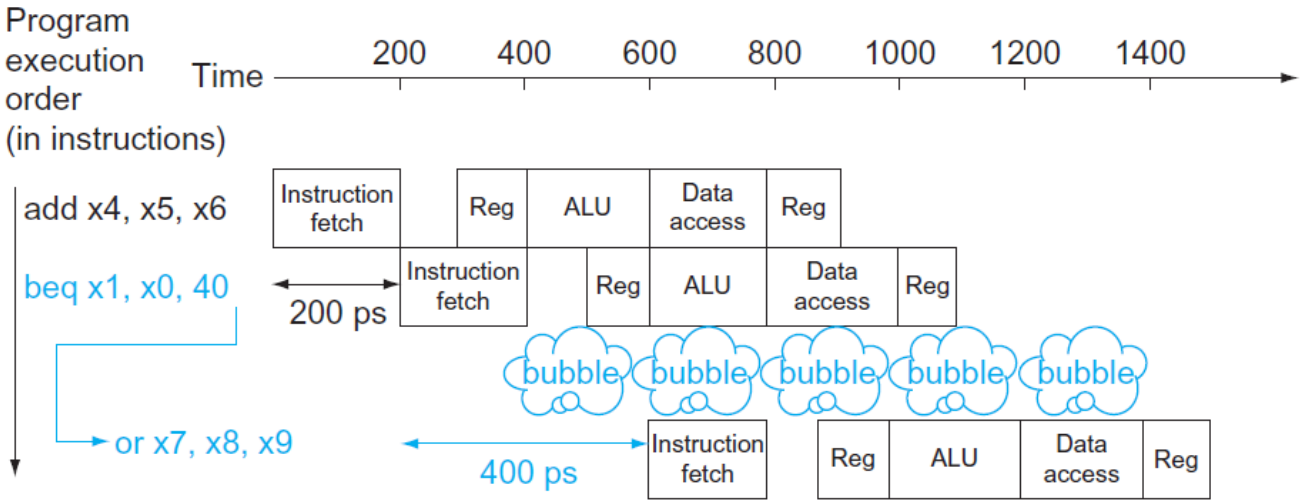

More-Realistic Branch Prediction

- Static branch prediction
  - Based on typical branch behavior
  - Example: loop and if-statement branches
    - Predict backward branches taken
    - Predict forward branches not taken
- Dynamic branch prediction
  - Hardware measures actual branch behavior
    - e.g., record recent history of each branch
  - Assume future behavior will continue the trend
    - When wrong, stall while re-fetching, and update history

Pipeline Summary

- Pipelining improves performance by increasing instruction **throughput**
  - Executes multiple instructions in parallel
  - Each instruction has the same latency
- Subject to hazards
  - Structure, data, control
- Instruction set design affects complexity of pipeline implementation