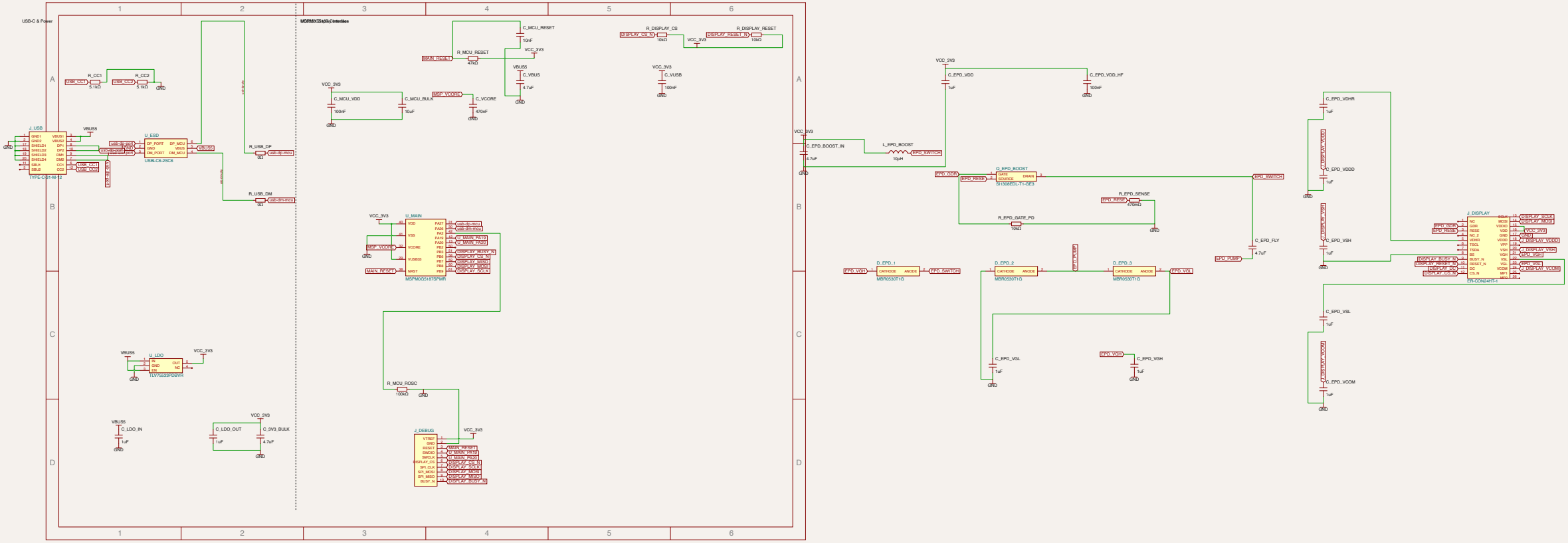

USB-C & Power
J_USB
TYPE-C-31-M-12
U_ESD
USBLC6-2SC6
R_CC1
R_CC2
R_USB_DP
R_USB_DM
U_MAIN
MSPM0G5187SPMR
U_LDO
TLV75533PDBVR
C_LDO_IN
C_LDO_OUT
C_3V3_BULK
R_MCU_RESET
C_MCU_RESET
C_VBUS
C_VUSB
C_MCU_VDD
C_MCU_BULK
C_VCORE
R_MCU_ROSC
J_DEBUG
R_DISPLAY_CS
R_DISPLAY_RESET
C_EPD_VDD
C_EPD_VDD_HF
C_EPD_BOOST_IN
L_EPD_BOOST
Q_EPD_BOOST
SI1308EDL-T1-GE3
R_EPD_SENSE
R_EPD_GATE_PD
C_EPD_FLY
D_EPD_1
D_EPD_2
D_EPD_3
MBR0530T1G
C_EPD_VGL
C_EPD_VGH
C_EPD_VDHR
C_EPD_VDDD
C_EPD_VSH
C_EPD_VSL
C_EPD_VCOM
J_DISPLAY
ER-CON24HT-1