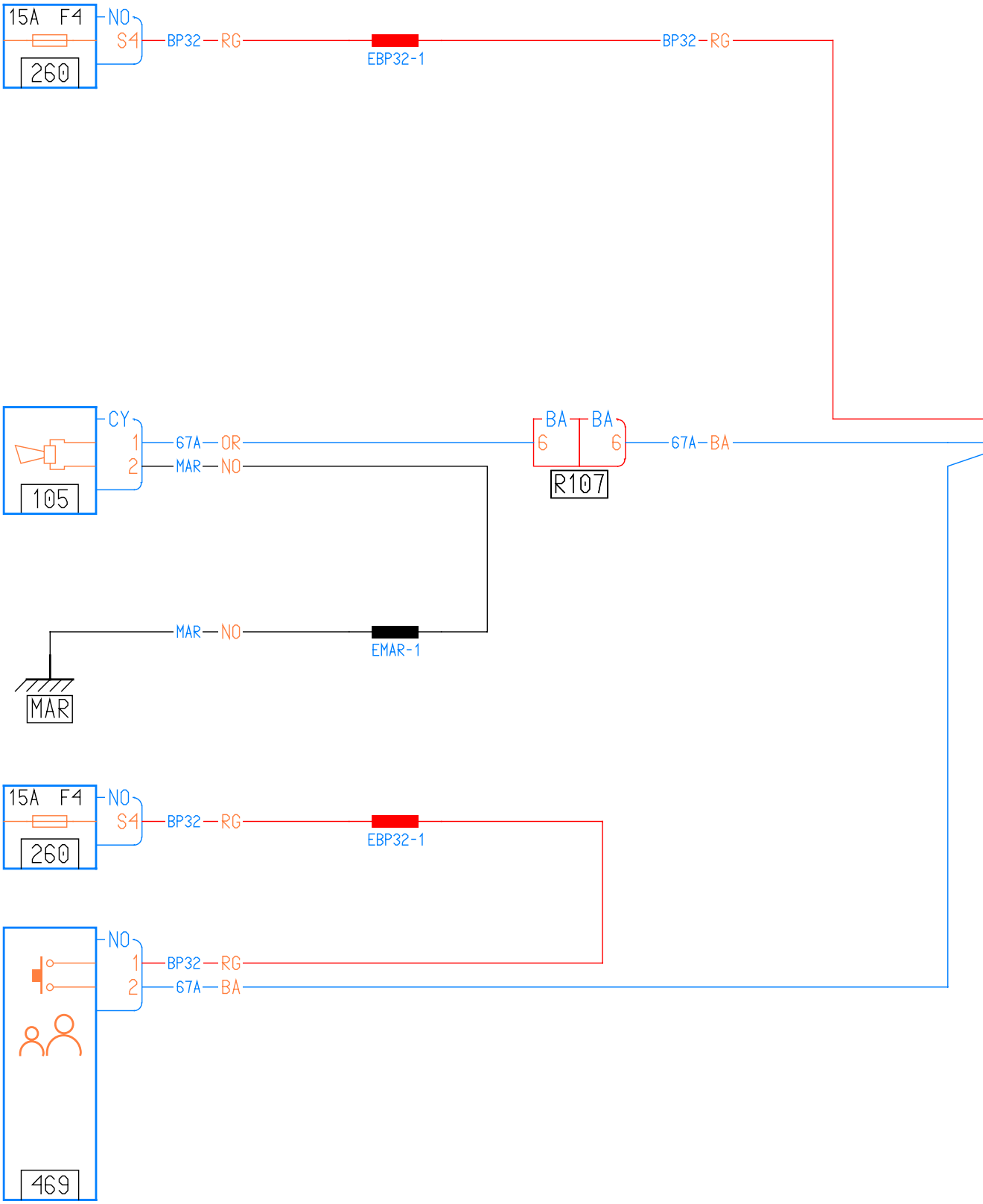
15A F4
260
NO
S4
BP32 — RG
EBP32-1
BP32 — RG
CY
1
2
105
67A — OR
MAR — NO
BA
6
BA
6
R107
67A — BA
MAR — NO
EMAR-1
MAR
15A F4
260
NO
S4
BP32 — RG
EBP32-1
NO
1
2
BP32 — RG
67A — BA
469

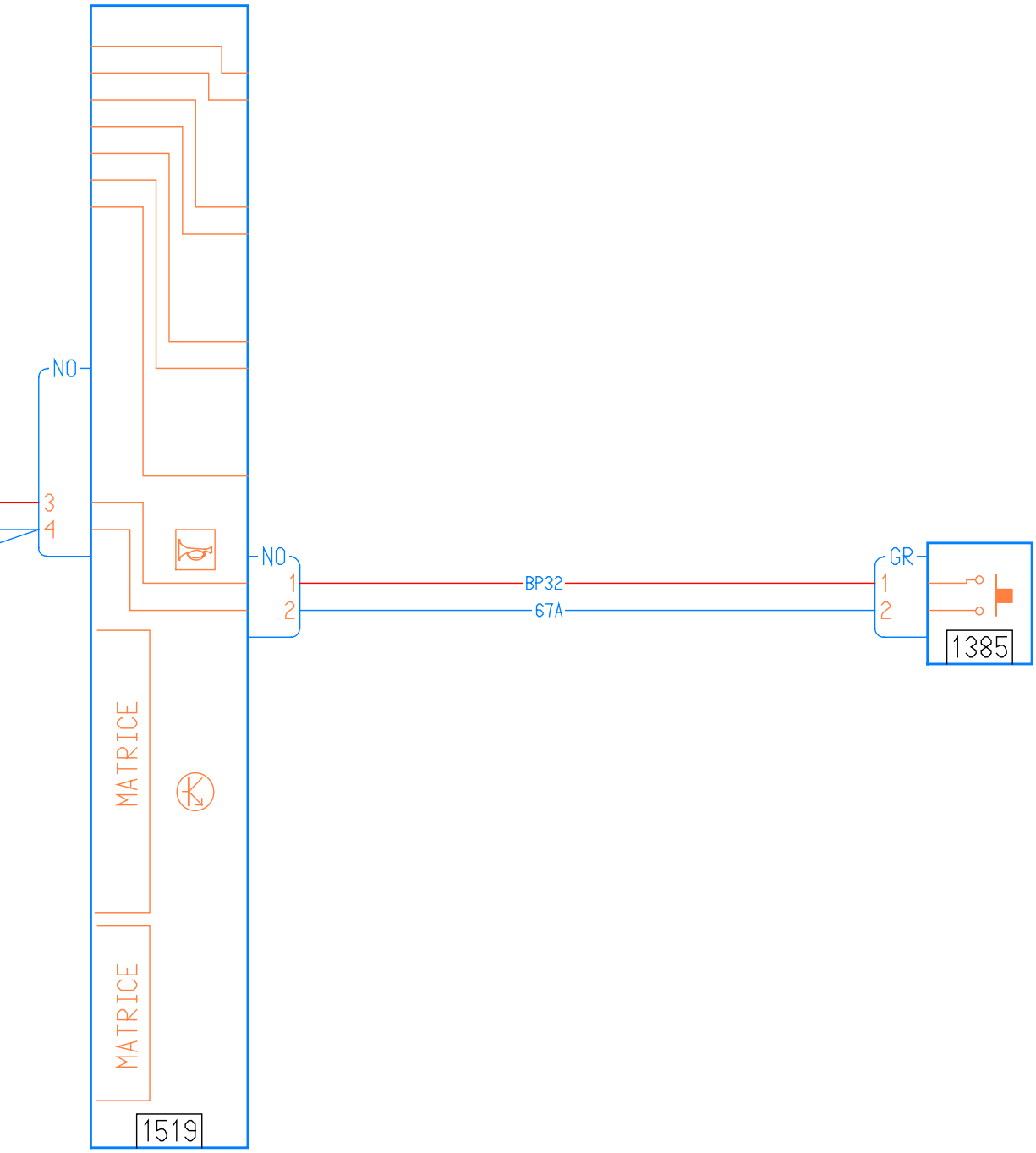
NO
3
4
NO
1
2
BP32
67A
GR
1
2
1385
MATRICE
MATRICE
1519