doi:10.1038/nature12919

# Quantum error correction in a solid-state hybrid spin register

G. Waldherr[1]*, Y. Wang[1]*, S. Zaiser[1], M. Jamali[1], T. Schulte-Herbrüggen[2], H. Abe[3], T. Ohshima[3], J. Isoya[4], J. F. Du[5], P. Neumann[1] & J. Wrachtrup[1,6]

**Error correction is important in classical and quantum computation. Decoherence caused by the inevitable interaction of quantum bits with their environment leads to dephasing or even relaxation. Correction of the concomitant errors is therefore a fundamental requirement for scalable quantum computation[1–7]. Although algorithms for error correction have been known for some time, experimental realizations are scarce[2–7]. Here we show quantum error correction in a heterogeneous, solid-state spin system[8–21]. We demonstrate that joint initialization, projective readout and fast local and non-local gate operations can all be achieved in diamond spin systems, even under ambient conditions. High-fidelity initialization of a whole spin register (99 per cent) and single-shot readout of multiple individual nuclear spins are achieved by using the ancillary electron spin of a nitrogen–vacancy defect. Implementation of a novel non-local gate generic to our electron–nuclear quantum register allows the preparation of entangled states of three nuclear spins, with fidelities exceeding 85 per cent. With these techniques, we demonstrate three-qubit phase-flip error correction. Using optimal control, all of the above operations achieve fidelities approaching those needed for fault-tolerant quantum operation, thus paving the way to large-scale quantum computation. Besides their use with diamond spin systems, our techniques can be used to improve scaling of quantum networks relying on phosphorus in silicon[19], quantum dots[22], silicon carbide[11] or rare-earth ions in solids[20,21].**

Heterogeneous spin systems for quantum computation seek to combine the strengths of their constituents: electron spins for fast, versatile and high-fidelity readout and control[8–17,19,20], and nuclear spins operating as well-shielded quantum bits yielding record values for coherence times (in, for example, diamond and silicon)[9,18–20]. However, even for such nuclear spins, unavoidable interaction with their environment (including the readout electron spin) occurs, leading to decoherence, which inevitably results in errors. Even small changes of a quantum state lead to finite error probabilities, unlike classical computing, where small state changes (for example, voltage) do not affect the final result. The threshold theorem states that the final error probability of a quantum algorithm on a large register can be made arbitrarily small if the probability of an error on a single qubit is below a certain threshold, and quantum error correction (QEC) is applied[1]. Despite being a cornerstone of scalable quantum systems, QEC has only been implemented on one solid-state system so far, namely superconducting circuits[7]. This is because of the challenging demands of high-fidelity non-local control of at least three qubits.

Here we demonstrate a high degree of control sufficient for QEC on a hybrid spin system, namely the nitrogen–vacancy defect (NV) in diamond[10,13–15,17,18,23–25]. Nuclear spins randomly distributed within an isotopically purified diamond with ~0.2% $^{13}$C (see Methods) are addressed, read out and initialized by the electron spin of the defect. The electron spin in turn is polarized and read out by optical means. Specifically, we use three nuclear spins ($^{14}$N with $I = 1$ and two $^{13}$C, that is, $^{13}C_1$ and $^{13}C_2$, with $I = 1/2$) as quantum bits (Fig. 1a). All nuclear spins of the register can be individually addressed via their hyperfine interaction with the electron spin, which shows spectral signatures of the 12 register states (Fig. 1b). We note that during revision of this manuscript, we became aware of a preprint[26] in which QEC was implemented with two nuclear spins and one electron spin.

Projective, single-shot readout of the nuclear spins is essential for high-fidelity initialization, proving genuine quantum correlations, and fast measurements (here a factor of ~5 faster than conventional readout). The method correlates the electron spin with the nuclear qubit state by a nuclear state specific controlled electron NOT ($C_nNOT_e$) gate[10,27]. The corresponding measurement sequence is shown in Fig. 1c. Here we have extended this method to three nuclei. The non-destructive nature of the readout process is ensured by application of a magnetic field[10,27]. As is apparent from Fig. 1e, the lifetime of the nuclear spin states is, indeed, much longer than the time needed to measure their states. To further quantify the fidelity of our readout, Fig. 1e also shows histograms of measurement results for nuclear spin readout. By defining a threshold between the two maxima of the distributions, the state of the spin is determined by measuring whether the photon count is below or above this threshold. Here we achieve readout fidelities of 95.8% for $^{14}$N, 96.9% for $^{13}C_1$ and 99.6% for $^{13}C_2$.

To initialize the nuclear register, we first apply polarization transfer from the electron spin[23], and then perform projective readout of the register (Fig. 2a). By this approach, we achieve high-fidelity initialization, while at the same time overcoming the limitation of purely measurement-based initialization where the success rate scales inversely with the number of register states. With a combination of these two methods, the initialization fidelity reaches values of up to 99% for the whole register into state $|^{14}N, {}^{13}C_1, {}^{13}C_2\rangle = |0, 0, 0\rangle$ (see Methods). Note that the electron spin is not explicitly included as a quantum bit in the register, but is solely used for the control of nuclear qubits, thus fully exploiting the advantages of our hybrid quantum system. Additionally, initialization of the NV into its negative charge state is verified by charge state post-selection (see Methods).

Previously reported entanglement of two nuclear spins relied on pseudo-initialization[24], or non-deterministic entanglement-by-measurement[14] at cryogenic temperatures. Instead, we use a novel scheme to create nuclear entanglement, which is based on a conditional π-phase (CPhase) gate on the electron spin[31]. Such a phase gate can either be implemented by adiabatic, geometric phase gates, which offer intrinsic robustness, or by exploiting the π phase shift that is acquired by a full 2π state rotation. Here we use the latter, in combination with optimal control, to achieve high-fidelity implementation, which is both robust and fast. Optimal control offers a general framework for creating robust state manipulation by a series of control steps (here with varying amplitude and phase of the control field, similar to dynamical decoupling[13]),

[1]3. Physikalisches Institut and Research Center SCOPE, University of Stuttgart, Pfaffenwaldring 57, 70569 Stuttgart, Germany. [2]Department of Chemistry, Technical University of Munich, 85747 Garching, Germany. [3]Japan Atomic Energy Agency, Takasaki, Gunma 370-1292, Japan. [4]Research Center for Knowledge Communities, University of Tsukuba, Tsukuba, Ibaraki 305-8550, Japan. [5]Hefei National Laboratory for Physical Sciences at the Microscale and Department of Modern Physics, University of Science and Technology of China, Hefei 230026, China. [6]Max Planck Institute for Solid State Research, Heisenbergstraße 1, 70569 Stuttgart, Germany.
*These authors contributed equally to this work.



©2014 Macmillan Publishers Limited. All rights reserved

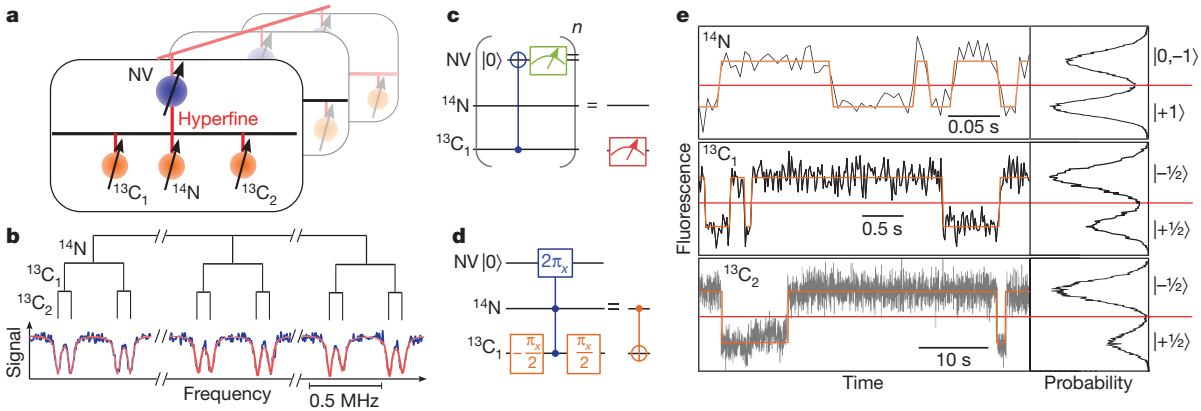


**Figure 1 | Single-shot readout and control of a nuclear spin register via the NV.** **a**, Illustration of the quantum register consisting of three nuclear spins (orange circles with black arrows) coupled by hyperfine interaction to the NV electron spin (blue circles with black arrows), forming a prototype single node of a larger register[15,17]. $^{13}C_{1,2}$ refers to $^{13}C$ nuclei at different lattice positions. **b**, Hyperfine splitting ($^{14}N$, 2.16 MHz; $^{13}C_1$, 413 kHz; $^{13}C_2$, 89 kHz) of the $m_S = 0$ to $-1$ transition into 12 individual lines. **c**, 'Wire diagram' for projective readout of nuclear spins[10,27]; the diagram here is for a $^{13}C$ spin. **d**, Wire diagram of a CNOT gate between two nuclear spins. **e**, Left side, time trace of NV fluorescence photons during repetitive readout of a particular nuclear spin (see **c**). The timescales of the dynamics depend on the nuclear spin life times and the $C_nNOT_e$ gate durations. Right side, photon-counting histograms of the time traces. The red line indicates the threshold for nuclear spin state discrimination.

which are numerically optimized and therefore suitable for complex Hamiltonians[28] (see Methods). Our approach is robust against the fast decoherence of the electron spin, while still exploiting hyperfine interaction, which allows for ultra-fast control of nuclear spins. It thus makes best use of the interactions in our electron nuclear hybrid spin quantum systems. Specifically, a robust, controlled $2\pi_{x,y}$ rotation (see Methods for nomenclature) of the electron spin conditional on the state of the nuclear register induces a $\pi$ phase shift of the corresponding register state (for example, $|11\rangle \rightarrow -|11\rangle$), resulting in a nuclear CNOT gate (Fig. 1d).

For three qubits, there are two types of fully entangled state that cannot be transformed into each other by local gates, the GHZ (Greenberger–Horne–Zeilinger) state ($|\mathrm{GHZ}\rangle = (|000\rangle + |111\rangle)/\sqrt{2}$) and the W state ($|\mathrm{W}\rangle = (|011\rangle + |101\rangle + |110\rangle)/\sqrt{3}$)[29]. Whereas the GHZ state decoheres on single qubit dephasing, this is not the case for the W state, as loss of coherence of a single qubit leaves a fully coherent state of the remaining spins. Using our CPhase gate, we create a GHZ-like entangled state (Fig. 2c, e) and a W state (Fig. 2d, f) of the three nuclear spins. The resulting density matrices obtained by state tomography (see Methods) are shown in Fig. 2e, f. The estimated fidelity $F = \langle\psi|\rho|\psi\rangle$ of the final state $\rho$ is $F = (88 \pm 1)\%$ for the GHZ state and $F = (85 \pm 3)\%$ for the W state, corrected by the readout fidelity of 89%. Factors reducing the fidelity (apart from the actual entanglement sequence) are $T_1$ decay of the electron spin (~96%) and initialization and post-selection fidelity (~97%).

To show genuine three-qubit entanglement, we also measure violation of the Mermin inequality[30]. For the GHZ-like state in Fig. 2c, the inequality is $|\langle\sigma_x\sigma_x\sigma_z\rangle + \langle\sigma_x\sigma_z\sigma_x\rangle + \langle\sigma_y\sigma_x\sigma_x\rangle - \langle\sigma_y\sigma_z\sigma_z\rangle| \leq 2$ (see Methods; $\sigma_i$ is the $i$ Pauli operator), which holds for any local, realistic theory. This inequality is violated by quantum mechanics, yielding a maximum value of 4. For the present case, we measured a value of $3.258 \pm 0.014$, clearly showing the quantum nature of the state.

To demonstrate the functionality of our hybrid quantum register, we perform QEC with the three nuclear spins. Generally, errors can occur in the form of bit flips, which act as $|0\rangle \leftrightarrow |1\rangle$, or phase flips, which act as $|x_+\rangle \leftrightarrow |x_-\rangle$, $|y_+\rangle \leftrightarrow |y_-\rangle$, where $|x_\pm\rangle = |0\rangle \pm |1\rangle$, $|y_\pm\rangle = |0\rangle \pm \mathrm{i}|1\rangle$. It can be seen that phase flips are identical to bit flips, but in a different basis of the qubit. The error correction protocols for bit flips and phase flips thus are essentially identical, only differing by local $\pi_{x,y}/2$ rotations for basis changes. QEC is based on encoding the information of one physical qubit into two states of a multi-qubit register, forming one logical qubit. The number of errors which can be corrected is given by the bit flip distance $d$ of the two logical states. As an example, for three qubits and logical states $|000\rangle$ and $|111\rangle$, three bit flips ($d = 3$) are

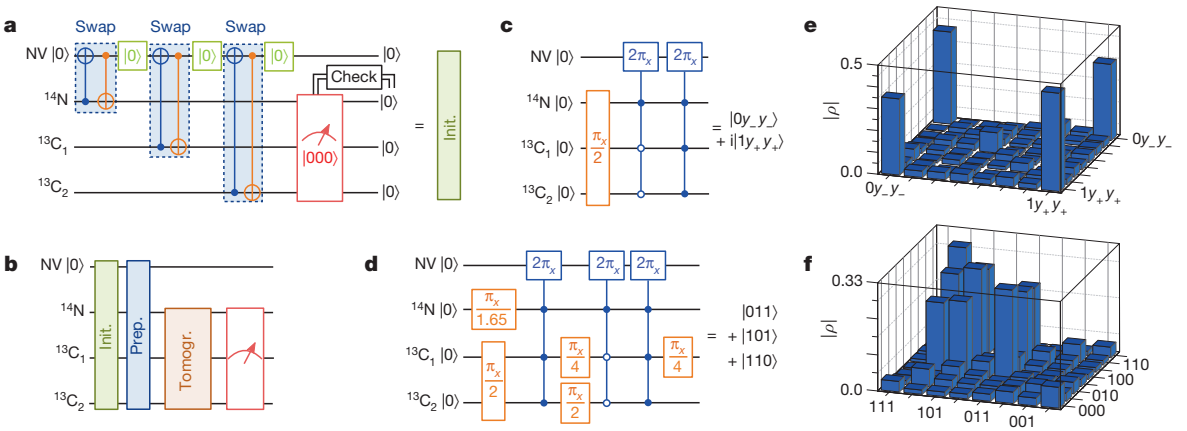


**Figure 2 | Three-qubit entangled states.** **a**, Initialization (Init.) sequence for the nuclear spin register. The $|0\rangle$ gate indicates optical initialization of the electron spin. Swap-like gates are used to transfer electron spin polarization onto the nuclear spins (Methods). A final measurement probes whether the state of the nuclear spins is $|000\rangle$. **b**, Measurement sequence. The tomography (Tomogr.) step consists of local gates on the nuclear spins. The preparation (Prep.) step is either the sequence shown in **c** for the GHZ state or the sequence shown in **d** for the W state. **e**, **f**, Reconstructed density matrices (absolute values of $\rho$) for the GHZ state (**e**) and for the W state (**f**; see text).



©2014 Macmillan Publishers Limited. All rights reserved

necessary to convert one state into the other. Thus, erroneous states resulting from single bit flips ($d = 1$) stay always closer to the original state and can therefore be corrected by a majority vote principle (see below), whereas multiple flips ($d > 1$) will inevitably destroy theinformation and render the protocol ineffective. Although errors in quantum mechanics appear as continuous state rotations, the subsequent error detection projects these rotations onto the two possible cases of not having an error or having an error on the qubit, with probability given by the angle of rotation. Thus, after detection, possible errors can be reverted to restore the original state.

Here we demonstrate a phase flip correction protocol, as the phase flip error rate is usually much higher than the bit flip error rate. Figure 3a shows the QEC sequence[6,7]. The code does not need error detection measurements: it corrects and restores the state of one qubit, and transfers any errors of this qubit onto the two other qubits by coherent evolution, as shown below. To re-initialize the register, the concomitant entropy increase on the other qubits is removed, for example by measurement[6]. The original state $|\psi\rangle = \alpha|0\rangle + \beta|1\rangle$ of $^{13}C_2$, which we use as an example to demonstrate QEC, is encoded as $\alpha|y_+y_+y_+\rangle + \beta|y_-y_-y_-\rangle$ on the full register. After decoding, the state will be $\alpha|000\rangle + \beta|111\rangle$ in the case of no error, and $\alpha|001\rangle + \beta|110\rangle$ in the case of an error on $^{13}C_2$. The error is detected via the other two qubits, by flipping them conditional on the state of $^{13}C_2$, yielding $|00\rangle \otimes (\alpha|0\rangle + \beta|1\rangle)$ and $|11\rangle \otimes (\alpha|1\rangle + \beta|0\rangle)$, respectively. Finally, the state of $^{13}C_2$ is flipped conditional on the state of the two other spins, resulting in $|00\rangle \otimes (\alpha|0\rangle + \beta|1\rangle)$ if there was no error, or $|11\rangle \otimes (\alpha|0\rangle + \beta|1\rangle)$ if there was an error, which is, in both cases, the original state $|\psi\rangle$ for $^{13}C_2$.

To obtain the performance of our implementation, we measure the fidelity of the quantum process on the main qubit (see Methods) as a function of the error probability. Controlled errors on a qubit are introduced by changing the phase of all operations on that qubit after the occurrence of the error. Figure 3b shows the results of our measurements. Indeed, single qubit errors are corrected by the algorithm (green triangles). The added complexity of the correction reduces the fidelity for very low error probability. However, even for simultaneous errors on all qubits (red dots), the fidelity with error correction surpasses the fidelity without error correction (blue circles), if the error probability increases. This region is illustrated by the red area in Fig. 3b.

Our experiments demonstrate a fully functional hybrid spin register. We have combined optimal-control-based error avoidance with error correction with high-fidelity state initialization. A key ingredient of our approach is the separation of readout and control (electron spin) and storage quantum bits (nuclear spins). Although we demonstrated fast and high-fidelity entanglement gates on diamond nuclear spins, our results present a benchmark for similar single-spin systems[11,19,20,22]. The latter only differ in electron spin readout and preparation techniques, whereas both the control methods based on spin resonance and the access to nuclear spins via hyperfine interaction are identical[19,20]. The present approach makes use of strongly coupled nuclear spins (hyperfine interaction > inhomogeneous broadening), but restricts the number of eligible defect centres. Including weakly coupled nuclear spins (hyperfine interaction > homogeneous broadening) will increase the number of accessible qubits per electron spin and at the same time render every defect centre a potential quantum register, independent of the particular setting of nuclei (see Methods). In addition, using nuclear spins with very weak hyperfine interaction allows for repetitive error correction as quantum information on those spins is preserved while the remaining register is reset[18].

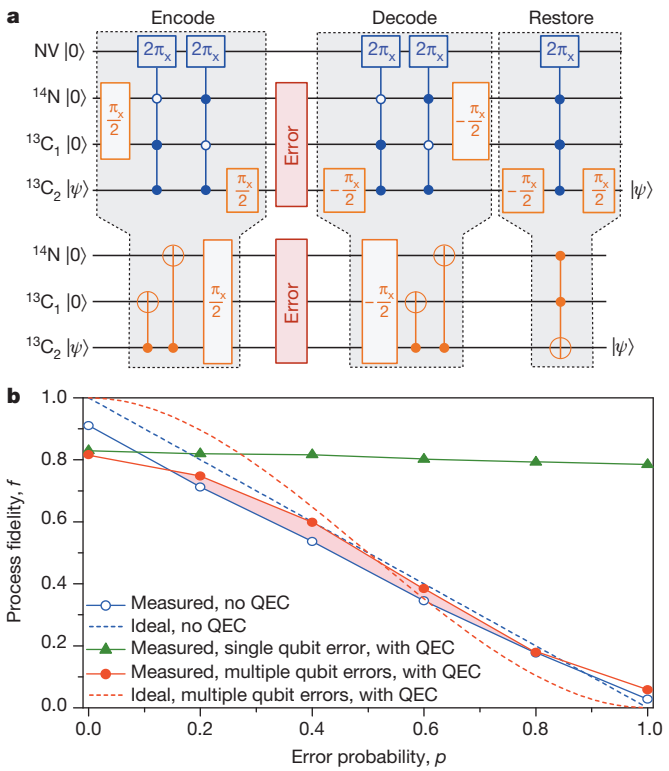


**Figure 3 | Quantum error correction.** **a**, Quantum circuit for phase flip QEC. Upper part, gates as implemented in the experiment; lower part, effective gates on the nuclear spins. For conditional gates, dots and circles correspond to $|1\rangle$ and $|0\rangle$ states, respectively. **b**, Dependence of measured process fidelity $f$ on the error probability $p$. The blue circles and the dashed blue line show data obtained without QEC, for our measurements and for the theoretical ideal case ($f(p) = 1 - p$), respectively. For all measurements displayed here, the total duration of the sequence was the same, for better comparison. The QEC code is implemented for errors induced only on $^{13}C_2$ (green triangles), and for errors with equal probability on all qubits (red dots; dashed red line for the theoretical ideal case with $f(p) = 1 - 3p^2 + 2p^3$). See main text for explanation of red shaded area.

## METHODS SUMMARY

**Experimental set-up.** The measurements were performed with a home-built confocal microscope. A 532-nm diode-pumped solid-state laser is focused via an oil objective onto the NV to excite its electron. A solid immersion lens (SIL) is created in the diamond to improve fluorescence detection. Fluorescence is filtered by a 650-nm long-pass filter and a 50-μm pinhole, and then detected by a single-photon-counting avalanche photodiode. The sample is a type IIa chemical vapour deposition diamond. NVs are formed by electron irradiation and subsequent annealing. The magnetic field is supplied by a permanent magnet attached to a three-dimensional (3D) positioning system, to align the magnetic field parallel to the NV axis. Here, fields of ~6,200 G were applied. Electron and nuclear spins are manipulated by radio frequency and microwave signals generated by an arbitrary-waveform generator, which allows for rotations of the spins around an axis in the $x$–$y$ plane of the Bloch sphere. The actual rotation axis is defined by the signal phase. The total operation in this work is denoted by $\phi_a$, where $\phi$ is the rotation angle and $a$ the rotation axis.

**Non-local gates.** Non-local gates are applied via the electron spin, which can be initialized by laser illumination. As can be seen in Fig. 1b, the microwave transition frequency of the electron spin is distinct for the 12 possible states of the nuclear register. By applying frequency-selective microwave pulses, operations on the electron spin can be carried out conditional on any state (or any combination of states) of the register. A $C_nNOT_e$ is implemented by a $\pi$ rotation of the electron spin, conditioned on the desired nuclear spin states. Here, the $\pi$ rotation commences around the $x$ axis of the Bloch sphere if not otherwise indicated.

**Online Content** Any additional Methods, Extended Data display items and Source Data are available in the online version of the paper; references unique to these sections appear only in the online paper.

**Received 2 September; accepted 27 November 2013.**
**Published online 29 January; corrected online 12 February 2014 (see full-text HTML version for details).**

1. Shor, P. W. in *Proc. 37th Symp. Foundations Comput.* 56–65 (IEEE Comp. Soc. Press, 1996); available at http://ieeexplore.ieee.org/xpls/abs_all.jsp?arnumber=548464.
2. Cory, D. G. *et al.* Experimental quantum error correction. *Phys. Rev. Lett.* **81,** 2152–2155 (1998).


©2014 Macmillan Publishers Limited. All rights reserved

3. Knill, E., Laflamme, R., Martinez, R. & Negrevergne, C. Benchmarking quantum computers: the five-qubit error correcting code. *Phys. Rev. Lett.* **86,** 5811–5814 (2001).
4. Boulant, N., Viola, L., Fortunato, E. & Cory, D. Experimental implementation of a concatenated quantum error-correcting code. *Phys. Rev. Lett.* **94,** 130501 (2005).
5. Moussa, O., Baugh, J., Ryan, C. A. & Laflamme, R. Demonstration of sufficient control for two rounds of quantum error correction in a solid state ensemble quantum information processor. *Phys. Rev. Lett.* **107,** 160501 (2011).
6. Schindler, P. *et al.* Experimental repetitive quantum error correction. *Science* **332,** 1059–1061 (2011).
7. Reed, M. D. *et al.* Realization of three-qubit quantum error correction with superconducting circuits. *Nature* **482,** 382–385 (2012).
8. Kane, B. E. A silicon-based nuclear spin quantum computer. *Nature* **393,** 133–137 (1998).
9. Morton, J. J. L. *et al.* Solid-state quantum memory using the $^{31}$P nuclear spin. *Nature* **455,** 1085–1088 (2008).
10. Neumann, P. *et al.* Single-shot readout of a single nuclear spin. *Science* **329,** 542–544 (2010).
11. Koehl, W. F., Buckley, B. B., Heremans, F. J., Calusine, G. & Awschalom, D. D. Room temperature coherent control of defect spin qubits in silicon carbide. *Nature* **479,** 84–87 (2011).
12. Pla, J. J. *et al.* A single-atom electron spin qubit in silicon. *Nature* **489,** 541–545 (2012).
13. Taminiau, T. *et al.* Detection and control of individual nuclear spins using a weakly coupled electron spin. *Phys. Rev. Lett.* **109,** 137602 (2012).
14. Pfaff, W. *et al.* Demonstration of entanglement-by-measurement of solid-state qubits. *Nature Phys.* **9,** 29–33 (2012).
15. Dolde, F. *et al.* Room-temperature entanglement between single defect spins in diamond. *Nature Phys.* **9,** 139–143 (2013).
16. Chekhovich, E. A. *et al.* Nuclear spin effects in semiconductor quantum dots. *Nature Mater.* **12,** 494–504 (2013).
17. Bernien, H. *et al.* Heralded entanglement between solid-state qubits separated by three metres. *Nature* **497,** 86–90 (2013).
18. Maurer, P. C. *et al.* Room-temperature quantum bit memory exceeding one second. *Science* **336,** 1283–1286 (2012).
19. Pla, J. J. *et al.* High-fidelity readout and control of a nuclear spin qubit in silicon. *Nature* **496,** 334–338 (2013).
20. Yin, C. *et al.* Optical addressing of an individual erbium ion in silicon. *Nature* **497,** 91–94 (2013).
21. Kolesov, R. *et al.* Optical detection of a single rare-earth ion in a crystal. *Nature Commun.* **3,** 1029 (2012).
22. Le Gall, C., Brunetti, A., Boukari, H. & Besombes, L. Optical Stark effect and dressed exciton states in a Mn-doped CdTe quantum dot. *Phys. Rev. Lett.* **107,** 057401 (2011).
23. Dutt, M. *et al.* Quantum register based on individual electronic and nuclear spin qubits in diamond. *Science* **316,** 1312–1316 (2007).
24. Neumann, P. *et al.* Multipartite entanglement among single spins in diamond. *Science* **320,** 1326–1329 (2008).
25. Robledo, L. *et al.* High-fidelity projective read-out of a solid-state spin quantum register. *Nature* **477,** 574–578 (2011).
26. Taminiau, T. H., Cramer, J., van der Sar, T., Dobrovitski, V. V. & Hanson, R. Universal control and error correction in multi-qubit spin registers in diamond. Preprint at http://arxiv.org/abs/1309.5452 (2013).
27. Dréau, A., Spinicelli, P., Maze, J. R., Roch, J.-F. & Jacques, V. Single-shot readout of multiple nuclear spin qubits in diamond under ambient conditions. *Phys. Rev. Lett.* **110,** 060502 (2013).
28. Machnes, S. *et al.* Comparing, optimizing, and benchmarking quantum-control algorithms in a unifying programming framework. *Phys. Rev. A* **84,** 022305 (2011).
29. Dür, W., Vidal, G. & Cirac, J. I. Three qubits can be entangled in two inequivalent ways. *Phys. Rev. A* **62,** 062314 (2000).
30. Mermin, N. D. Extreme quantum entanglement in a superposition of macroscopically distinct states. *Phys. Rev. Lett.* **65,** 1838–1840 (1990).
31. Filidou, V. *et al.* Ultrafast entangling gates between nuclear spins using photo-excited triplet states. *Nature Phys.* **8,** 596–600 (2012).


**Acknowledgements** We thank F. Dolde, I. Jakobi, M. Kleinmann, F. Jelezko, J. Honert, A. Brunner and C. Walter for experimental help and discussions. We acknowledge financial support from the Max Planck Society, the ERC project SQUTEC, the DFG SFB/TR21, the EU projects DIAMANT, SIQS, QESSENCE and QINVC, the JST-DFG (FOR1482 and FOR1493), and the Volkswagenstiftung.

**Author Contributions** Y.W., G.W., P.N. and J.W. conceived the experiments; G.W. and S.Z. prepared the sample and performed the experiments; Y.W. calculated the robust pulses; Y.W., G.W. and S.Z. analysed the data; J.I., H.A., T.O. and P.N. performed the electron irradiation; M.J. fabricated the SIL; G.W., J.W., P.N., Y.W., T.S.-H. and J.F.D. wrote the manuscript; and P.N. and J.W. supervised the project.

**Author Information** Reprints and permissions information is available at www.nature.com/reprints. The authors declare no competing financial interests. Readers are welcome to comment on the online version of the paper. Correspondence and requests for materials should be addressed to G.W. (g.waldherr@physik.uni-stuttgart.de).



©2014 Macmillan Publishers Limited. All rights reserved

## METHODS

**Experimental set-up.** The measurements were performed with a home-built confocal microscope. A 532-nm diode-pumped solid-state laser is focused via an oil objective onto the NV to excite its electron. A solid immersion lens (SIL) was created in the diamond to improve fluorescence detection. Fluorescence is filtered by a 650-nm long-pass filter and a 50 μm pinhole, and then detected by a single photon counting avalanche photodiode. The sample is a type IIa chemical vapour deposition diamond. NVs are formed by electron irradiation and subsequent annealing. The magnetic field is supplied by a permanent magnet attached to a 3D positioning system, to align the magnetic field parallel to the NV axis. Here, fields of ~6,200 G were applied. Electron and nuclear spins are manipulated by radio-frequency and microwave signals generated by an arbitrary-waveform generator, which allows for rotations of the spins around an axis in the $x$–$y$ plane of the Bloch sphere. The actual rotation axis is defined by the signal phase. The total operation in this work is denoted by $\phi_a$, where $\phi$ is the rotation angle and $a$ the rotation axis. Additionally, microwave signals are mixed with a high-frequency source to obtain high-frequency arbitrary waveforms at around 15 GHz. Signals are applied via a coplanar waveguide microstructure, which is built directly onto the diamond near the NV, such that optical access to the NV is possible through the gap of the waveguide.

**Non-local gates.** Non-local gates are applied via the electron spin, which can be initialized by laser illumination. As can be seen in Fig. 1b, the microwave transition frequency of the electron spin is distinct for the 12 possible states of the nuclear register. By applying frequency-selective microwave pulses, operations on the electron spin can be carried out conditional on any state (or any combination of states) of the register. A $C_nNOT_e$ is implemented by a π rotation of the electron spin, conditioned on the desired nuclear spin states. Here, the π rotation commences around the $x$ axis of the Bloch sphere if not otherwise indicated.

In the following, we illustrate the mechanism for the creation of a two-qubit GHZ-like state using a nuclear CPhase gate based on a conditional $2\pi_x$ rotation of the electron spin. We start with both nuclear qubits initialized in state $|00\rangle$, and apply $\pi_x/2$ rotations on both, to end up in (excluding normalization):

$$|00\rangle - i|01\rangle - |10\rangle - i|11\rangle \quad (1)$$

Now, a CPhase conditional on the nuclear spin state being $|11\rangle$ will change the phase of this state to $-|11\rangle$. This yields the entangled GHZ-like state

$$|00\rangle - i|10\rangle - |10\rangle - i|11\rangle = |0y_-\rangle + |1y_+\rangle \quad (2)$$

where $|y_\pm\rangle = |0\rangle \pm i|1\rangle$. This method allows the implementation of nuclear CNOT gates (Fig. 1d).

**$^{13}$C hyperfine interactions.** To find an NV with two $^{13}$C nuclear spins suitable for single-shot readout, we acquired statistics of possible $^{13}$C hyperfine splittings for almost 3,300 NVs. For each analysed NV, the EPR spectrum is measured, as shown in Fig. 1b. A multi-peak function fit was used to determine hyperfine interactions larger than approximately 100 kHz, as the line width of the transition is around 50 kHz. These measurements were performed at magnetic fields of around 10 G. However, the magnetic field was not aligned for all NVs, which can slightly alter the measured hyperfine interaction compared to the value at zero field or at small, aligned magnetic fields. The deviation is expected to be below 2.5% (in the worst case of pure dipolar hyperfine interaction, unfavourable $^{13}$C position and perpendicular magnetic field). Finally, we can create a hyperfine probability spectrum in the following way: for each observed hyperfine interaction, we take a Gaussian distribution at the centre of the observed value, and a standard deviation according to the fit accuracy. Summing up over all measured values results in the spectrum shown in Extended Data Fig. 1. By trying to perform single-shot readout on these $^{13}$C spins, we found that hyperfine splittings (in kHz) of 124, 211, 384, 422, 517 are usable for single-shot readout at magnetic fields of around 0.5 T, with spin lifetimes (in readout steps) comparable to or better than $^{14}$N (ref. 10).

**Scaling of strongly and weakly coupled $^{13}$C spins.** The average number of $^{13}$C spins available for single-shot readout depends on the external magnetic field[27], the concentration of $^{13}$C nuclei, and the coherence time of the electron spin (that is, the minimum hyperfine splitting required for detection of the nuclear spin). To investigate how many nuclei can be used as quantum register, we performed numerical simulations. The average number of suitable $^{13}$C nuclear spins can be estimated by calculating the volume within the diamond of suitable nuclei positions. To this end, we assume purely magnetic dipole–dipole hyperfine interaction. The conditions for a suitable position are (1) that the hyperfine splitting is larger than a certain threshold value (for example, larger than the line broadening), and (2) that the difference of the nuclear spin eigenbasis $\{|n_i\rangle\}$ with respect to the $z$-basis $\{|z_i\rangle\}$ is smaller than $1 - |\langle n_i|z_i\rangle|^2 < 0.25 \times 10^{-4}$. Numerical integration over the volume surrounding the NV yields the effective volume of suitable $^{13}$C positions. The average number of $^{13}$C spins is calculated by the density of nuclei in the diamond lattice and the $^{13}$C concentration. Extended Data Fig. 2a shows the scaling of the average number of suitable $^{13}$C spins per defect centre with the magnetic field $B$. As $B$ is increased, the eigenbasis of the nuclear spins becomes mainly defined by the magnetic field, and independent of the electron spin state, which enables quantum-non-demolition readout. At some point, all available nuclear spins with large enough hyperfine splitting are suitable for single-shot readout, and the curves in Extended Data Fig. 2a saturate.

Depending on the hyperfine splitting and the electron spin coherence time, nuclear spins are divided into those strongly coupled and those weakly coupled. Strongly coupled means that the hyperfine splitting is larger than the electron spin inhomogeneous broadening ($1/T_2^*$), such that the nuclear spins can be directly addressed by the electron (compare Fig. 1b). The weak coupling case indicates that the hyperfine splitting is smaller than $1/T_2^*$, but larger than the electron spin homogeneous broadening ($1/T_2$). In this case, the nuclear spins can be addressed via the electron spin by dynamical decoupling[13].

In this work, we focused on strongly coupled nuclear spins. For randomly distributed $^{13}$C, the average number of suitable strongly coupled $^{13}$C spins depending on $B$ is shown in Extended Data Fig. 2a, for a $^{13}$C concentration of 0.2% (bright red dots), as used here, and for the natural $^{13}$C concentration of 1.1% (dark red dots). Additionally, this value could be increased by deliberate construction of the diamond surrounding the NV centre, for example, by implantation of molecules including $^{13}$C atoms. This method would be limited by the addressability of all conditional electron spin transitions, for example transitions $m_S = 0 \leftrightarrow -1$. This means conditional on all possible nuclear spin states $|m_{I,1}, m_{I,2}, \ldots, m_{I,N}\rangle$ of all $N$ coupled nuclear spins, where the $m_{I,i}$ are the nuclear spin projections. For $N$ nuclei, there are $2^N$ such transitions. The inhomogeneous linewidth of the NV electron spin transition can be small enough to resolve hyperfine interactions on the order of a few kHz (ref. 18). The maximum suitable hyperfine interaction of the closest $^{13}$C spins is a few MHz. Therefore, in principle up to $\sim 10^3$ resonance lines are resolvable, resulting in ~10 addressable nuclear spins. Thus, the presented high-speed and high-fidelity CPhase gate is suitable for use with a maximum number of coupled nuclear spins of around 10. The above estimation, however, assumes that each of the mentioned coupled nuclear spins, if ordered by their coupling strength, increase their coupling strength by roughly a factor of two with respect to the previous nucleus.

The number of usable nuclear spins can be increased even further via addressing the nuclear spin resonance frequency space and by including weakly coupled nuclear spins. In that case, the number of transitions scales much more conveniently (that is, linearly with $N$); however, the fast CPhase gate is no longer practicable. For detection and manipulation of weakly coupled $^{13}$C nuclear spins via the electron spin using dynamical decoupling[13], the limiting factor is the homogeneous decoherence time $T_2$ of the electron spin. The $T_2$ time depends linearly on the concentration $c$ of $^{13}$C (ref. 32). For a diamond with natural abundance of $^{13}$C (1.1%), a $T_2$ time of 0.65 ms has been reported[32], corresponding to a minimal hyperfine interaction of ~1.5 kHz for a detectable $^{13}$C. Note that for very low $^{13}$C concentration, the $T_2$ time is not limited by the $^{13}$C concentration, but by other effects[32] (for example, longitudinal spin lattice relaxation, $T_1$). Extended Data Fig. 2a shows that in a diamond with natural abundance of $^{13}$C (1.1%), on average ~10 suitable $^{13}$C spins with hyperfine splitting of >20 kHz are available per NV. Note that for smaller hyperfine splitting, the density of spins increases greatly (see Extended Data Fig. 2b), which makes selective addressing of these spins challenging.

**Creation of an SIL.** All measurements of the state of the NV and surrounding nuclear spins are based on detection of the NV fluorescence. Therefore, efficient photon detection is beneficial, as it increases measurement accuracy and reduces measurement time. For single-shot readout, measurement fidelity and hence state initialization fidelity is increased. However, much of the fluorescence of the NV is lost at the diamond surface due to total internal reflection. This problem can be overcome by creating an SIL[33]. The SIL is a solid half-sphere with the emitter (NV) at its central point, such that the fluorescence of the NV will always hit the solid surface perpendicularly. Here, we created a SIL directly in the diamond around the NV by focused ion beam milling (Extended Data Fig. 3a). This increases the detected fluorescence of the NV by a factor of more than 3 (Extended Data Fig. 3b).

**Details of the measurement sequence.** The full measurement sequence in shown in Extended Data Fig. 4. The first step for every measurement is the initialization of nuclear spins. This is achieved by measuring the state of the nuclear spin register, until it is in the desired state. For technical reasons, we always perform the full measurement sequence, and finally only use the results for which the state was initialized. Because the probability for successful initialization decreases with the number of states, we also use swap-like gates to transfer the initialized electron spin state to each nuclear spin, as shown in Extended Data Fig. 4 and Fig. 2a. Owing to imperfect gates and non-perfect electron initialization, this increases the success probability of initialization of the whole register by a final single-shot measurement to around 50%. Another important issue is the charge state of the NV. Studies

©2014 Macmillan Publishers Limited. All rights reserved

have shown that for typical measurement conditions, the NV is in the undesired neutral charge state with around 30% probability, which shows short coherence times[34,35]. Here, we use charge-state post-selection as demonstrated in ref. 36. To this end, a controlled π-pulse is applied on the electron spin only if the nuclear spins are in the initial state. Next, we apply a controlled π-pulse on the $^{14}$N from $m_I = +1$ to 0, depending on the electron spin state. These two pulses will only work if the NV is properly initialized in its negative charge state. Otherwise, the $^{14}$N will remain in the $m_I = +1$ state, which can be checked by a final single-shot measurement. After these two π-pulses, we start the actual experiment, as described in the main text, using the $^{14}$N $m_I = 0, -1$ subspace as a qubit. Finally, we read out the state of the nuclear spins. First, we measure if the $^{14}$N is still in the $m_I = +1$ state, in which case the NV was in the wrong charge state, and the result is discarded. Subsequently, we measure the state of the remaining qubit register by probing each state for separate runs of the experiment.

For the initialization of the nuclear spin register, we can in principle reach near-perfect initialization, by shifting the threshold in Fig. 1e further down. Extended Data Fig. 5 shows the measured initialization fidelity as a function of the duration of the single-shot readout (in number of readout steps) and the relative threshold shift. An initialization fidelity approaching 99% can be achieved. This method comes with a trade-off of increased measurement time, because the probability of a successful initialization will be reduced.

**Optimal control of electron spin.** Owing to the weak coupling to the two $^{13}$C spins, selective rotations on specified transitions with standard rectangular microwave pulses will induce an additional unwanted operation on others that are off-resonance. To suppress the off-resonance effect and achieve a high-fidelity control of the electron spin, we apply optimal control to the electron spin. Two microwave frequencies ($f_1$, $f_2$) are imposed simultaneously to cover the whole spectrum and realize arbitrary control of the electron spin (Extended Data Fig. 6a). The amplitude and phase of each microwave frequency are taken as free parameters to obtain the desired control. The pulse sequence is optimized using the GRAPE algorithm[28,37]. In the experiment, the optimal pulse sequence is realized by an arbitrary waveform generator (AWG; Agilent Technologies M8190A). Extended Data Fig. 6b shows an optimal pulse sequence applied to prepare a GHZ state of nuclear spins in the experiment. It is indeed a controlled phase (CPhase) gate on the electron spin, which maps the nuclear spin states $|100\rangle$ and $|111\rangle$ to states $-|100\rangle$ and $-|111\rangle$, respectively. The calculated fidelity is above 99% even for small detuning (±20 kHz), which means that the pulse is robust in the presence of inhomogeneous line broadening of the electron spin. In the actual implementation, the instability of the microwave amplitude is found to be one factor limiting the performance of the pulse.

**Mermin inequality.** A first test for the non-deterministic and non-local structure of quantum mechanics was proposed by Bell in 1964 for the case of two entangled particles[38]. A general inequality to measure this behaviour of quantum mechanics for multiple particles was derived by Mermin[30]. For three particles, the inequality is

$$\left|\langle\sigma_x\sigma_x\sigma_y\rangle + \langle\sigma_x\sigma_y\sigma_x\rangle + \langle\sigma_y\sigma_x\sigma_x\rangle - \langle\sigma_y\sigma_y\sigma_y\rangle\right| \leq 2 \tag{3}$$

for any deterministic, local theory. However, the state

$$|\psi\rangle = \frac{1}{\sqrt{2}}(|000\rangle + i|111\rangle) \tag{4}$$

yields the value 4 for inequality (3). In our case, the prepared state is

$$|\psi\rangle = \frac{1}{\sqrt{2}}(|0\bar{y}\bar{y}\rangle + i|1yy\rangle) \tag{5}$$

where $|y\rangle = |0\rangle + i|1\rangle$ and $|\bar{y}\rangle = |0\rangle - i|1\rangle$. This state can be derived from equation (4) by π/2 rotations around the $x$ axis on qubits two and three (second and third value in the state description). Thereby, $\sigma_y$ in inequality (3) becomes $\sigma_z$ for these two qubits, yielding the inequality:

$$\left|\langle\sigma_x\sigma_x\sigma_z\rangle + \langle\sigma_x\sigma_z\sigma_x\rangle + \langle\sigma_y\sigma_x\sigma_x\rangle - \langle\sigma_y\sigma_z\sigma_z\rangle\right| \leq 2 \tag{6}$$

To measure the single terms, we transform each term to $\langle II\sigma_z\rangle$ (where $I$ is the identity). This can be achieved by a unitary operation $U$ according to $\langle\psi|A|\psi\rangle = \langle\psi'|A'|\psi'\rangle$ for $|\psi'\rangle = U|\psi\rangle$ and $A' = UAU^\dagger$. The operations are shown in Extended Data Table 1. The Cphase gate is described in the main text; here it is conditional on the states $|011\rangle$ and $|101\rangle$.

**State tomography.** The density matrix of the entangled GHZ and W state is measured by state tomography. Therefore, the density matrix $\rho$ is expanded as

$$\rho = \sum_i a_i A_i \tag{7}$$

where the $A_i$ form a basis of mutually orthogonal operators. In the case of a single qubit, we would use the Pauli matrices $I$, $\sigma_x$, $\sigma_y$, $\sigma_z$. For multiple qubits, the $A_i$ are all combinations of the Pauli matrices for all qubits, that is, $A_i = \left\{I^{(1)}I^{(2)}\ldots I^{(n)}, I^{(1)}I^{(2)}\ldots\sigma_x^{(n)}, \ldots\sigma_z^{(1)}\sigma_z^{(2)}\ldots\sigma_z^{(n)}\right\}$, where the superscripts indicate on which qubit the operator acts. The $a_i$ in equation (7) are given by the expectation value $\mathrm{Tr}(A_i\rho)$ of the corresponding operator. These expectation values can be determined experimentally. Because only the expectation value of the $\sigma_z$ operator can be measured directly, we apply π/2 rotations around the $y$ and $x$ axes of a spin to get the expectation values of $\sigma_x$ and $\sigma_y$. Solving equation (7) with the measured $a_i$ yields the state of the system. Note that owing to statistical measurement errors, the measured density matrix may not be positive semi-definite.

**Process tomography.** A general characterization of a quantum mechanical process $\mathcal{E}$ on a system is obtained by expanding the density matrix $\rho$ into a basis of orthonormal states $|\psi_i\rangle$, and measuring the effect of the operator $E_i$ of the process on each of these states:

$$\begin{aligned}\rho &= \sum_i p_i|\psi_i\rangle\langle\psi_i|,\\ \mathcal{E}(\rho) &= \sum_i E_i p_i|\psi_i\rangle\langle\psi_i|E_i^\dagger\end{aligned} \tag{8}$$

The $E_i$ can be measured by initializing the states $|\psi_i\rangle$ and performing state tomography after the process. Furthermore, we can do the expansion

$$E_i = \sum_m \chi_{im}A_m \tag{9}$$

where the $A_m$ form a basis of mutually orthogonal operators. Inserting equation (9) into equation (8) yields

$$\mathcal{E}(\rho) = \sum_{mn} \chi_{mn}A_m\rho A_n^\dagger \tag{10}$$

where the $\chi_{mn} = \sum_i \chi_{im}\chi_{in}$ form the process matrix $\chi$.

For the error correction, we only consider the effect of the process on the qubit that is carrying the information after the correction. Additionally, we are only interested in the fidelity $F$ of the measured process and the ideal process $\chi_{\mathrm{id}}$, which is:

$$F = \mathrm{Tr}(\chi_{\mathrm{id}}\chi) \tag{11}$$

Here, we chose the Pauli matrices $A_m = \{I, \sigma_x, \sigma_y, \sigma_z\}$ as the operator basis. The ideal process for the error correction is the identity, $I$, and therefore $\chi_{11}^{\mathrm{id}} = 1$ with all other values being zero. The fidelity is then $\chi_{11}$. Extended Data Table 2 shows the measurements we perform to obtain

$$\chi_{11} = \frac{1 + (r_{z,z} - r_{-z,z} + r_{x,x} - r_{-x,x} + r_{y,y} - r_{-y,y})}{4} \tag{12}$$

by noting that $\chi_{11} + \chi_{22} + \chi_{33} + \chi_{44} = 1$.


32. Mizuochi, N. *et al.* Coherence of single spins coupled to a nuclear spin bath of varying density. *Phys. Rev. B* **80,** 041201 (2009).
33. Marseglia, L. *et al.* Nanofabricated solid immersion lenses registered to single emitters in diamond. *Appl. Phys. Lett.* **98,** 133107 (2011).
34. Waldherr, G. *et al.* Dark states of single nitrogen-vacancy centers in diamond unraveled by single shot NMR. *Phys. Rev. Lett.* **106,** 157601 (2011).
35. Aslam, N., Waldherr, G., Neumann, P., Jelezko, F. & Wrachtrup, J. Photo-induced ionization dynamics of the nitrogen vacancy defect in diamond investigated by single-shot charge state detection. *New J. Phys.* **15,** 013064 (2013).
36. Waldherr, G. *et al.* High dynamic range magnetometry with a single nuclear spin in diamond. *Nature Nanotechnol.* **7,** 105–108 (2011).
37. Khaneja, N., Reiss, T., Kehlet, C., Schulte-Herbrggen, T. & Glaser, S. J. Optimal control of coupled spin dynamics: design of NMR pulse sequences by gradient ascent algorithms. *J. Magn. Reson.* **172,** 296–305 (2005).
38. Bell, J. S. On the Einstein Podolsky Rosen paradox. *Physics* **1,** 195–200 (1964).
39. Waldherr, G., Neumann, P., Huelga, S., Jelezko, F. & Wrachtrup, J. Violation of a temporal Bell inequality for single spins in a diamond defect center. *Phys. Rev. Lett.* **107,** 090401 (2011).


©2014 Macmillan Publishers Limited. All rights reserved

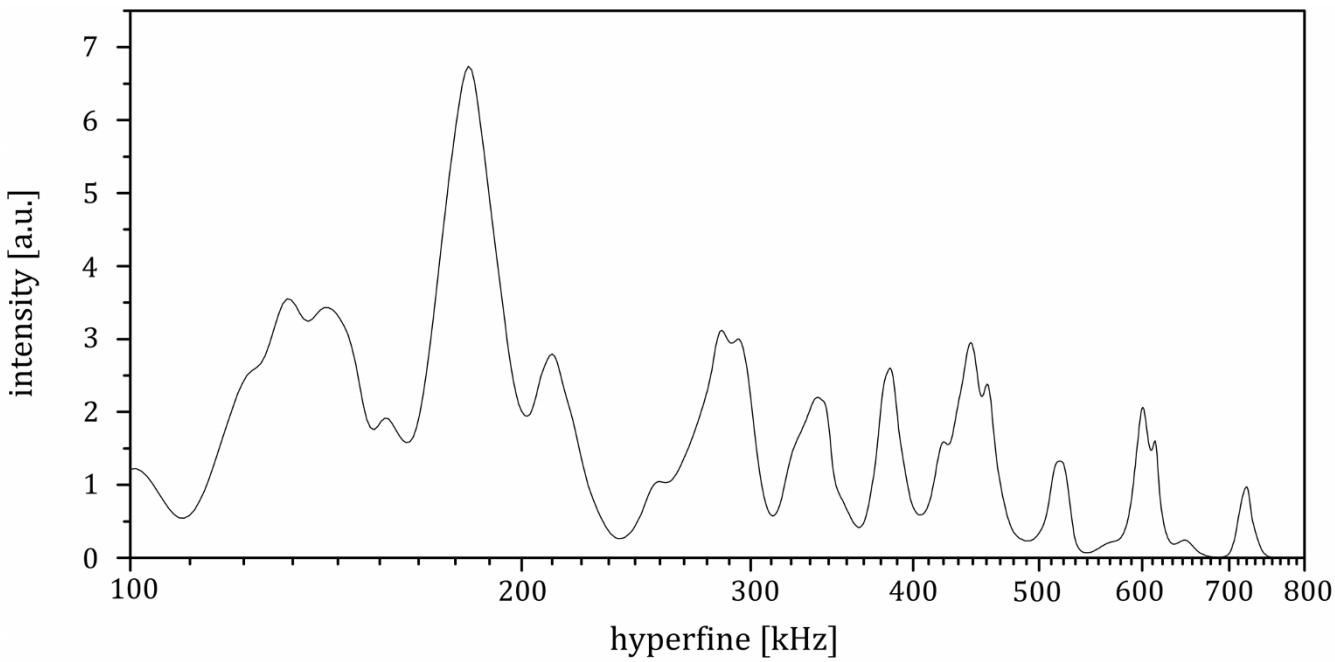


**Extended Data Figure 1 | Hyperfine spectrum as explained in the main text.** Only hyperfine values with an error of less than 4% were used, such that hyperfine values which are close to each other can be resolved.

©2014 Macmillan Publishers Limited. All rights reserved

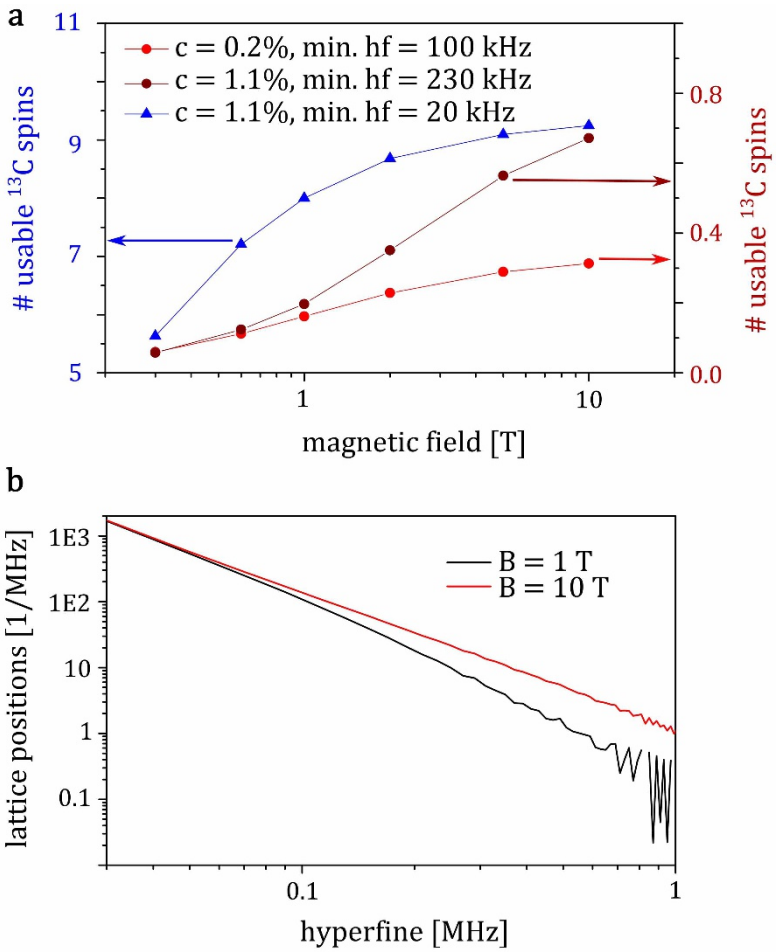


**Extended Data Figure 2 | Estimation of number of usable $^{13}$C spins.** **a**, Average number of suitable $^{13}$C spins per NV for different $^{13}$C concentrations *c* and different minimum hyperfine (min. h.f.) interactions. Red dots, strongly coupled nuclei; blue triangles, effect of including weakly coupled nuclei with at least 20 kHz hyperfine splitting. **b**, Spectral density of suitable lattice positions per NV for different magnetic fields *B*. Note that for these simulations, actual lattice positions are not taken into account. The fluctuations at higher hyperfine interaction are due to numerical grain, that is, due to discretization of the integration volume.

©2014 Macmillan Publishers Limited. All rights reserved

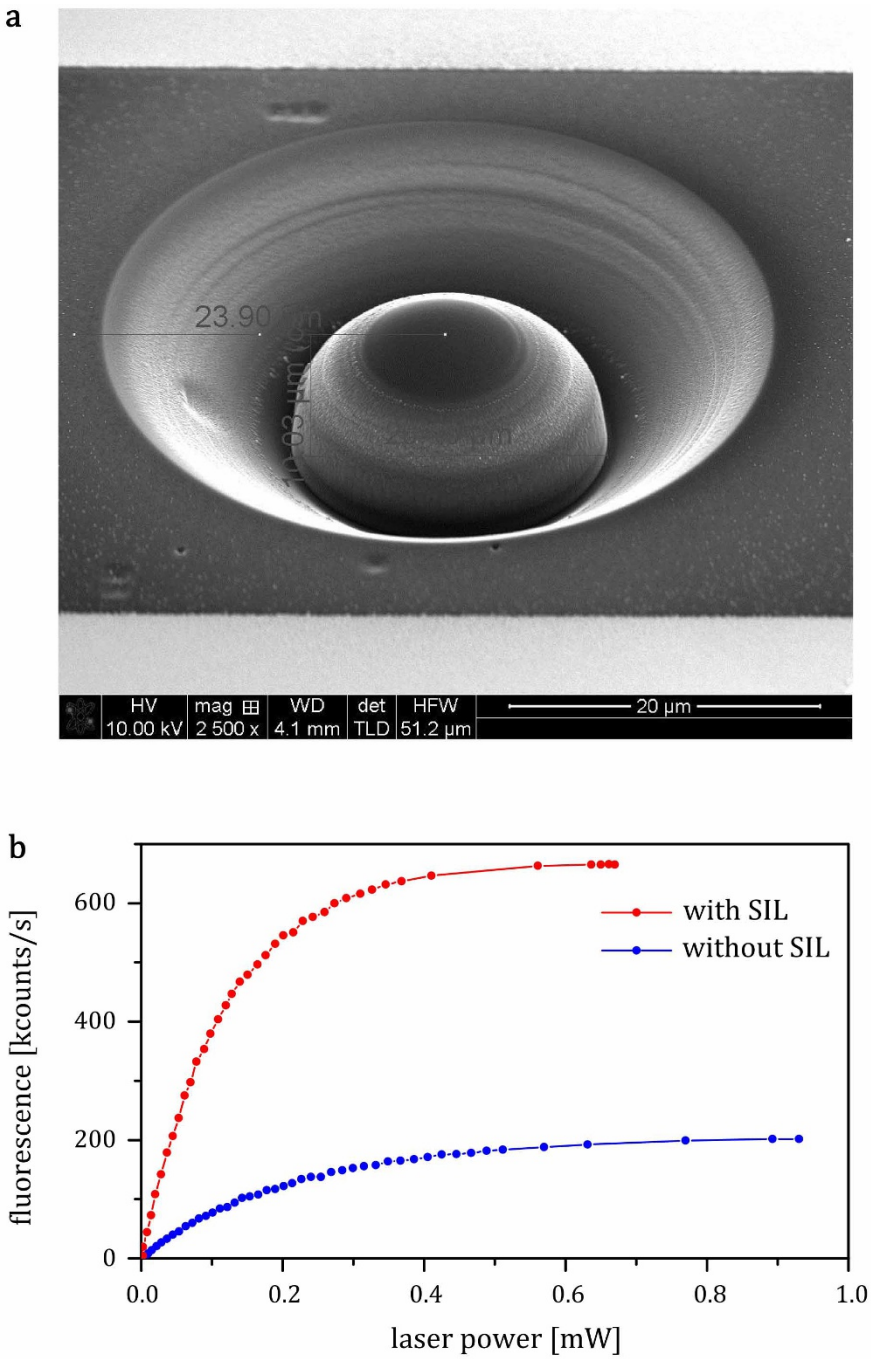


**Extended Data Figure 3 | Solid immersion lens (SIL).** **a**, Image of the SIL in diamond. **b**, Saturation curves of the NV with and without the SIL (measurements were performed with a oil-immersion objective).

©2014 Macmillan Publishers Limited. All rights reserved

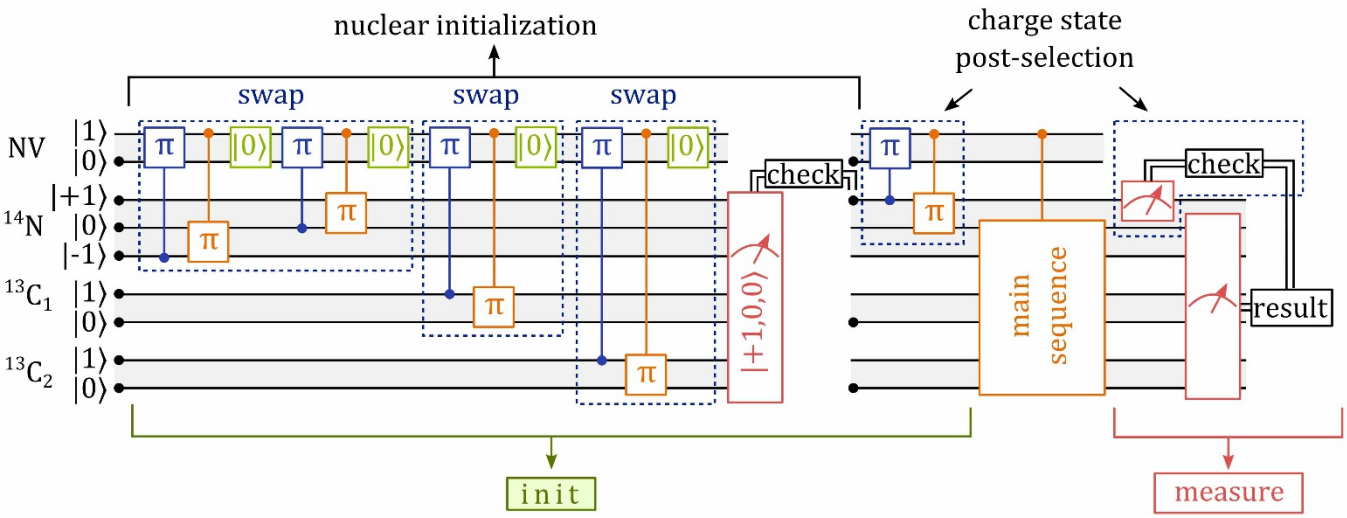


**Extended Data Figure 4 | Full sequence for initialization and readout of the nuclear register.** The 'main sequence' part is the actual quantum algorithm, including final local rotations for setting the measurement basis. Note that the charge state post-selection can be substituted by charge state pre-selection[34,39].

©2014 Macmillan Publishers Limited. All rights reserved

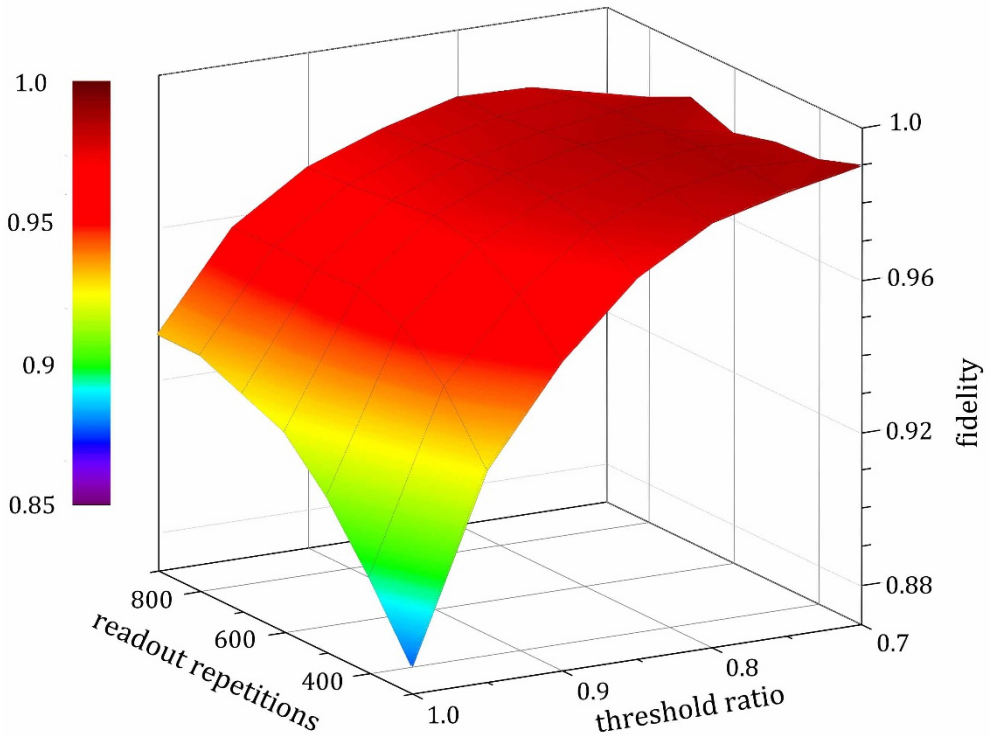


**Extended Data Figure 5 | Initialization fidelity of the whole spin register as a function of the number of readout repetitions and the relative shift of the initialization threshold.** The fidelity is colour-coded according to the colour bar.

©2014 Macmillan Publishers Limited. All rights reserved

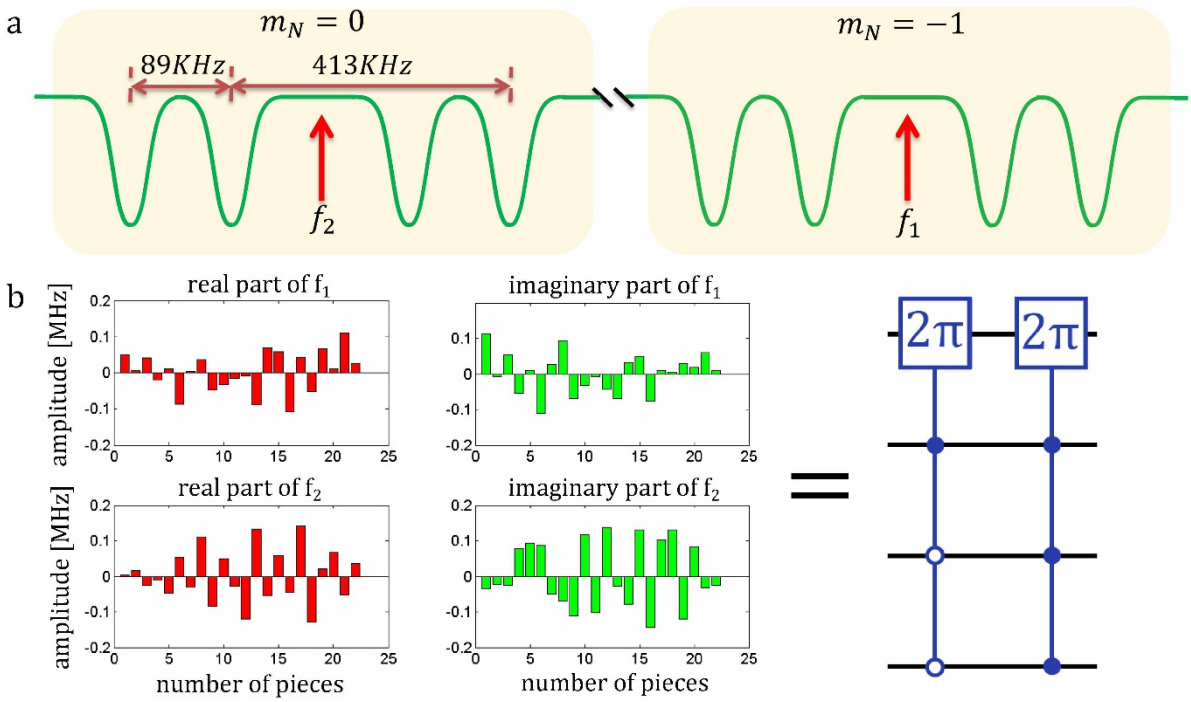


**Extended Data Figure 6 | Optimal control.** **a**, The two microwave frequencies $f_1$ and $f_2$, relative to the electron spin transition frequencies, applied in the experiment. **b**, The pulse sequence on the left side shows the piecewise-constant control amplitudes (Rabi frequency) for the real and imaginary parts of $f_1$ and $f_2$, where each piece (bar) has a duration of 1.46 μs. It realizes the controlled gate on the electron spin given on the right side.

©2014 Macmillan Publishers Limited. All rights reserved

**Extended Data Table 1 | Measurement procedure for the Mermin inequality**

| Measure | Operation |
|---|---|
| $\langle\sigma_x\sigma_x\sigma_z\rangle$ | $\left(\frac{\pi}{2}\right)_{1,y}\left(\frac{\pi}{2}\right)_{2,y}\left(-\frac{\pi}{2}\right)_{3,y}(\mathrm{CPhase})\left(\frac{\pi}{2}\right)_{3,y}$ |
| $\langle\sigma_x\sigma_z\sigma_x\rangle$ | $\left(\frac{\pi}{2}\right)_{1,y}(\mathrm{CPhase})\left(\frac{\pi}{2}\right)_{3,y}$ |
| $\langle\sigma_y\sigma_x\sigma_x\rangle$ | $\left(\frac{\pi}{2}\right)_{1,x}\left(\frac{\pi}{2}\right)_{2,y}(\mathrm{CPhase})\left(\frac{\pi}{2}\right)_{3,y}$ |
| $\langle\sigma_y\sigma_z\sigma_z\rangle$ | $\left(\frac{\pi}{2}\right)_{1,x}\left(-\frac{\pi}{2}\right)_{3,y}(\mathrm{CPhase})\left(\frac{\pi}{2}\right)_{3,y}$ |

©2014 Macmillan Publishers Limited. All rights reserved

**Extended Data Table 2 | Measurement procedure and theoretical results for the process fidelity**

| Init | Measure | result |
|---|---|---|
| $\|z\rangle$ | $\sigma_z$ | $r_{z,z} = \chi_{11} + \chi_{14} + \chi_{41} + \chi_{44}$ |
| $\|-z\rangle$ | $\sigma_z$ | $r_{-z,z} = -\chi_{11} + \chi_{14} + \chi_{41} - \chi_{44}$ |
| $\|x\rangle$ | $\sigma_x$ | $r_{x,x} = \chi_{11} + \chi_{12} + \chi_{21} + \chi_{22}$ |
| $\|-x\rangle$ | $\sigma_x$ | $r_{-x,x} = -\chi_{11} + \chi_{12} + \chi_{21} - \chi_{22}$ |
| $\|y\rangle$ | $\sigma_y$ | $r_{y,y} = \chi_{11} + \chi_{13} + \chi_{31} + \chi_{33}$ |
| $\|-y\rangle$ | $\sigma_y$ | $r_{-y,y} = -\chi_{11} + \chi_{13} + \chi_{31} - \chi_{33}$ |

©2014 Macmillan Publishers Limited. All rights reserved