e-con Systems India Pvt Ltd

Web: www.e-consystems.com

Email: camerasolutions@e-consystems.com

e-CAM80_CUOAGX

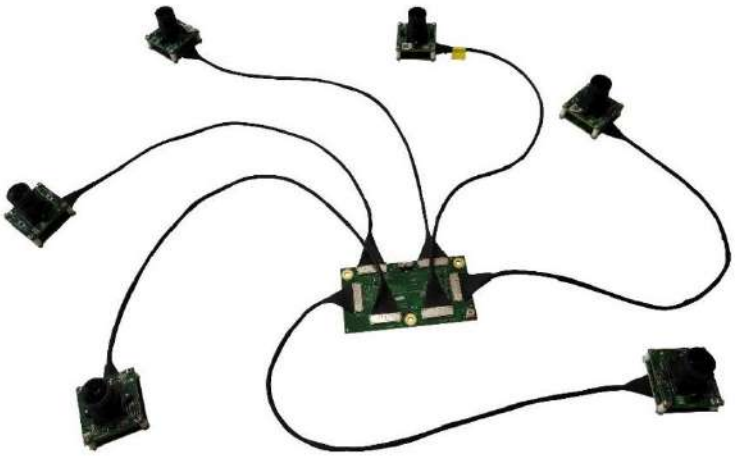

Datasheet

Revision 1.2
9th April 2024

Contents

1 Revision History 3
2 Introduction 4
3 Disclaimer 4
4 Description 4
4.1 Features 7
5 Key Specification 7
5.1 CMOS Image Sensor Specification 7
6 Pin Description 8
6.1 Pin-out Details of Adaptor Board Connector CN1 and CN2 8
6.2 Pin-out Details of HEX Board Camera Connector CAM A (CN2) 10
6.3 Pin-out Details of HEX Board Camera Connector CAM B (CN3) 11
7 Connector Part Numbers 12
8 Electrical Specification 12
8.1 Recommended Operating Condition 12
8.2 Power Consumption Details 12
8.3 Functional Temperature Range 13
9 Mechanical Specifications 13
Support 17

1 Revision History

Rev	Date	Description	Author
1.0	10-Mar-2023	Initial Release	Product Marketing Team
1.1	18-Jan-2024	FPS Detail and Product Images Updated	Camera Dev Team
1.2	09-Apr-2024	Updated “Mechanical Specification” section	Camera Dev Team

2 Introduction

e-CAM80_CUOAGX is a new MIPI camera board which helps to connect upto six IMX415 camera modules to the Jetson AGX Orin™ / Xavier™ kit. This camera module is designed and developed by e-con Systems, which has over two decades of experience in designing, developing, and manufacturing OEM cameras. The prebuild driver for this camera along with the camera board is provided by e-con Systems.

e-CAM80_CUOAGX is an 8 MP color camera with S-mount (also known as M12 board lens) lens holder. The S-mount is small form-factor lens mounts for board cameras. e-CAM80_CUOAGX camera contains 1/2.8" IMX415 sensor from STARVIS family of CMOS image sensor from Sony ®. All the six cameras were interfaced to the J509 connector of the Jetson AGX Orin™ / Xavier™ development kit using the e-CAM30_HEXCUXVR_BASE_BRD base board.
This document describes about the features of e-CAM80_CUOAGX board and the pinouts of the connectors including the mechanical diagram.

3 Disclaimer

The specifications and features of e-CAM80_CUOAGX camera board are provided here as reference only and e-con Systems reserves the right to edit or modify this document without any prior intimation of whatsoever.

4 Description

The NVIDIA® Jetson AGX Orin™ / Xavier™ development kit is a full featured development platform for visual computing and ideal for applications requiring high computational performance in a low power envelope. This development kit is pre-flashed with a Linux environment, includes support for many common APIs, and is supported by NVIDIA® complete development toolchain.

e-CAM80_CUOAGX is a multi-board solution, which has three boards as follows:

- Module Board - e-CAM83_CUMI415_MOD
- Adapter Board - e-CAM80_CUMI334_ADP_H01R2
- Camera base board - e-CAM30_HEXCUXVR_BASE_H02R1

The following figures show the adaptor board, module board and base board.

Figure 1: e-CAM80_CUMI334_ADP Adaptor Board

Figure 2: e-CAM83_CUMI415_MOD Module Board

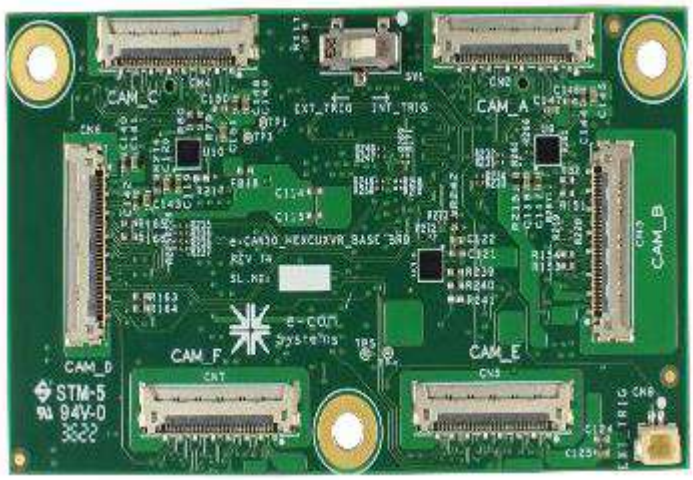

Figure 3: Camera Base Board

The e-CAM80_CUOAGX camera base board has one 120-pin connector (CN1) that can be directly mated with Jetson™ development kits and six 30-pin micro-coaxial connectors (CN2 (CAM A), CN3 (CAM B), CN4 (CAM C), CN5 (CAM E), CN6 (CAM D), and CN7 (CAM F)) for interfacing with camera modules through a 30 cm micro-coaxial cable. The camera connector positions in e-CAM80_CUOAGX board is shown in the following figure.

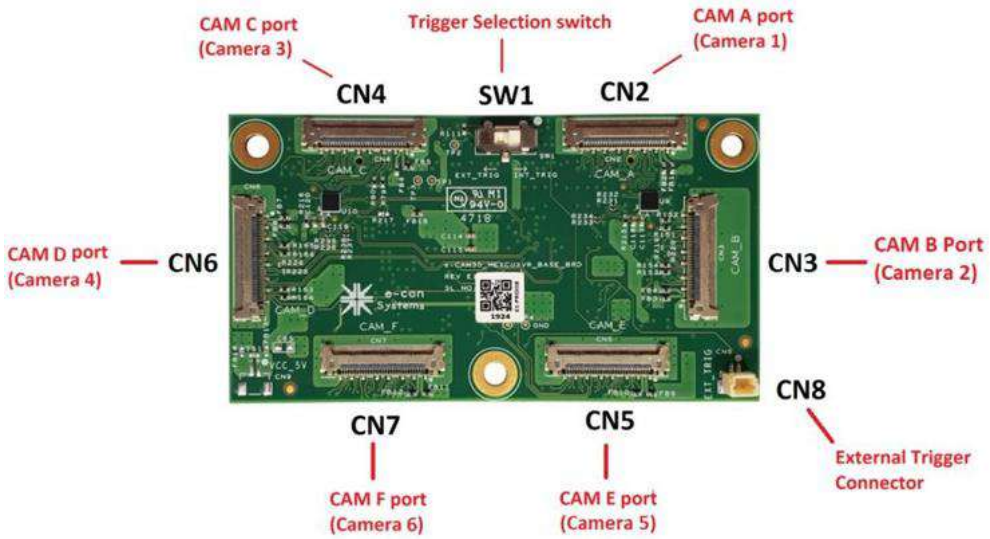

Figure 4: Camera Connector Positions in e-CAM80_CUOAGX Board

The asynchronous mode is the normal streaming mode. In this mode, all six cameras can be controlled individually.

The following table lists the frame rates supported by the camera with NVIDIA® Jetson AGX Orin™ / Xavier™ development kit in different modes.

Resolution	Frame Rate (fps)
3840 x 2160 (12 BPP)	30
3840x2160 (10BPP)	60
1920 x 1080* (12 BPP)	60
1280 x 720** (12 BPP)	89

Table 1: Maximum Frame Rates in 4 lane Mode

Resolution	Frame Rate (fps)
3840 x 2160 (12 BPP)	16
3840x2160 (10BPP)	30
1920 x 1080* (12 BPP)	32
1280 x 720** (12 BPP)	48

Table 2: Maximum Frame Rates in 2 lane Mode

(*) - 1944 x 1096 is cropped to 1920 x 1080 on the application end to skip the dummy bytes. 1944 x 1096 will be referred to as 1920 x 1080 throughout the document.
(**) - 1296 x 732 is cropped to 1280 x 720 on the application end to skip the dummy bytes. 1296 x 732 is obtained from the sensor through centre cropping and binning. 1296 x 732 will be referred to as 1280 x 720 throughout the document.

4.1 Features

The features of e-CAM80_CUOAGX are as follows:

- Multi-board solution
- 8 MP camera sensor
- Compatible with Jetson AGX Orin™ / Xavier™ development kit
- Standard M12 lens holder for use with customized optics or lenses for various applications
- Light weight, versatile, and portable design
- Imaging applications
  - 8 MP CMOS image sensor with 1/2.8" optical form-factor
  - Field of View (FOV) angle is not the same for all preview resolutions.
- Linux camera driver (V4L2) for 8 MP MIPI CSI-2 camera module is supported.
- Operating Voltage: 3.3V ±5%, Power consumption: ~ 3.9204 W.
- RoHS compliant

5 Key Specification

The following table lists the key specifications of e-CAM80_CUOAGX.

Description	Specification
Size (L x W x H)	30 mm × 30 mm
Video Format	NV12
Image Resolution	3840 x 2160 (8 MP)
Supported OS	Linux

Table 3: Key Specifications of e-CAM80_CUOAGX

5.1 CMOS Image Sensor Specification

The following table lists the specification of CMOS image sensor used in e-CAM80_CUOAGX board.

Sensor Specification	
Type / Optical Size	1/2.8" optical format CMOS Image sensor
Resolution	8 MP
Sensor Type	RGB RAW 10/12-bit
Pixel size	1.45 µm x 1.45 µm
Total number of pixels	3864(H) x 2228(V)
Sensor Effective Area	3864(H) x 2192(V)

Table 4: CMOS Image Sensor Specification

For more information about the IMX415 CMOS image sensor or for *Datasheet*, please contact Sony® corporation.

6 Pin Description

The e-CAM80_CUMI334_ADP board has dual rows, 13-pin connectors. CN1 connector is used for mating with module board. The e-CAM80_CUMI334_ADP board has a I-PEX connector (CN2), to mate with I-PEX cable. CN2 is a single row 30-pin I-PEX cable connector, which is 30 cm long, used for connecting with e-CAM30_HEXCUXVR_BASE_BRD.

You must note the given pin numbers and direction with respect to the adaptor board.

6.1 Pin-out Details of Adaptor Board Connector CN1 and CN2

The following table lists the pin-out details of CN1 connector.

CN1 Pin No	Signal Name	Pin Type	Description
1	MIPI_CLK_N	INPUT	MIPI Clock Lane Differential Pair -
2	MIPI_DATA0_N	INPUT	MIPI Data Lane 0 Differential Pair -
3	MIPI_CLK_P	INPUT	MIPI Clock Lane Differential Pair +
4	MIPI_DATA0_P	INPUT	MIPI Data Lane 0 Differential Pair +
5	GND	POWER	Ground signal for digital and analog
6	GND	POWER	Ground signal for digital and analog
7	MIPI_DATA2_N	INPUT	MIPI Data Lane 2 Differential Pair -
8	CSI_I2C_SCL	OUTPUT	I2C Clock signal
9	MIPI_DATA2_P	INPUT	MIPI Data Lane 2 Differential Pair +
10	CSI_I2C_SDA	I/O	I2C Data signal
11	GND	POWER	Ground signal for digital and analog
12	CAM_RESET	OUTPUT	RESET the ISP
13	MIPI_DATA3_N	INPUT	MIPI Data Lane 3 Differential Pair -
14	INTERRUPT	OUTPUT	ISP interrupts carrier board
15	MIPI_DATA3_P	INPUT	MIPI Data Lane 3 Differential Pair +
16	GND	POWER	Ground signal for digital and analog
17	GND	POWER	Ground signal for digital and analog
18	CAM_HSYNC	INPUT	Line Valid Signal
19	MIPI_DATA1_N	INPUT	MIPI Data Lane 1 Differential Pair -
20	CAM_VSYNC	INPUT	Frame Valid Signal
21	MIPI_DATA1_P	INPUT	MIPI Data Lane 1 Differential Pair +
22	CAM_XMASTER	OUTPUT	Decides Master or Slave mode
23	GND	POWER	Ground signal for digital and analog
24	TRIGGER	-	-
25	CAM_FLASH	OUTPUT	Status signal
26	VCC_3P3	POWER	3.3V Power supply for camera boards

Table 5: Adaptor Board CN1 Connector Pin Description Details

The following table lists the pin-out details of CN2 connector:

CN2 Pin No	Signal Name	Pin Type	Description
1	VCC_3P3	POWER	3.3V Power supply for camera and adaptor boards
2	VCC_3P3	POWER	3.3V Power supply for camera and adaptor boards
3	VCC_1P8	POWER	1.8V Power supply for camera and adaptor boards
4	GND	POWER	Ground signal for digital and analog
5	GND	POWER	Ground signal for digital and analog
6	INTERRUPT	INPUT	Camera Power down signal
7	CSI_I2C_SCL	INPUT	I2C Clock signal
8	CSI_I2C_SDA	I/O	I2C Data Signal
9	GND	POWER	Ground signal for digital and analog
10	MIPI_D2_N	OUTPUT	MIPI Data Lane 2 Differential Pair -
11	MIPI_D2_P	OUTPUT	MIPI Data Lane 2 Differential Pair +
12	TRIGGER	INPUT	Camera trigger signal
13	HSYNC	I/O	Line Valid Signal
14	GND	POWER	Ground signal for digital and analog
15	MIPI_D1_N	OUTPUT	MIPI Data Lane 1 Differential Pair -
16	MIPI_D1_P	OUTPUT	MIPI Data Lane 1 Differential Pair +
17	GND	POWER	Ground signal for digital and analog
18	GND	POWER	Ground signal for digital and analog
19	MIPI_D0_N	OUTPUT	MIPI Data Lane 0 Differential Pair -
20	MIPI_D0_P	OUTPUT	MIPI Data Lane 0 Differential Pair +
21	RESET	INPUT	Camera reset signal (Active low)
22	GND	POWER	Ground signal for digital and analog
23	XMASTER	OUTPUT	Decides Master or Slave mode
24	MIPI_CLK_N	OUTPUT	MIPI Clock Lane Differential Pair -
25	MIPI_CLK_P	OUTPUT	MIPI Clock Lane Differential Pair +
26	GND	POWER	Ground signal for digital and analog
27	MIPI_D3_N	OUTPUT	MIPI Data Lane 3 Differential Pair -
28	MIPI_D3_P	OUTPUT	MIPI Data Lane 3 Differential Pair +
29	CAM_FLASH	INPUT	Camera flash signal
30	VSYNC	I/O	Frame Valid Signal

Table 6: Adaptor Board CN2 Connector Pin Description Details

6.2 Pin-out Details of HEX Board Camera Connector CAM A (CN2)

The following table lists the pin-out details of CAM A connector.

Pin No	Signal Name	Pin Type	Description
1	VCC_3P3	POWER	3.3V Power supply for camera and adaptor boards
2	VCC_3P3	POWER	3.3V Power supply for camera and adaptor boards
3	VCC_1P8	POWER	1.8V Power supply for camera and adaptor boards
4	GND	POWER	Ground signal for digital and analog
5	GND	POWER	Ground signal for digital and analog
6	PWDN	OUTPUT	Camera Power down signal
7	I2C_SCL	OUTPUT	I2C Clock signal
8	I2C_SDA	I/O	I2C Data Signal
9	GND	POWER	Ground signal for digital and analog
10	MIPI_D2_N	INPUT	MIPI Data Lane 2 Differential Pair -
11	MIPI_D2_P	INPUT	MIPI Data Lane 2 Differential Pair +
12	TRIGGER	OUTPUT	Camera trigger signal
13	RSVD	-	Reserved
14	GND	POWER	Ground signal for digital and analog
15	MIPI_D1_N	INPUT	MIPI Data Lane 1 Differential Pair -
16	MIPI_D1_P	INPUT	MIPI Data Lane 1 Differential Pair +
17	GND	POWER	Ground signal for digital and analog
18	GND	POWER	Ground signal for digital and analog
19	MIPI_D0_N	INPUT	MIPI Data Lane 0 Differential Pair -
20	MIPI_D0_P	INPUT	MIPI Data Lane 0 Differential Pair +
21	RESET	OUTPUT	Camera reset signal (Active low)
22	GND	POWER	Ground signal for digital and analog
23	RSVD	-	Reserved
24	MIPI_CLK_N	INPUT	MIPI Clock Lane Differential Pair -
25	MIPI_CLK_P	INPUT	MIPI Clock Lane Differential Pair +
26	GND	POWER	Ground signal for digital and analog
27	MIPI_D3_N	INPUT	MIPI Data Lane 3 Differential Pair -
28	MIPI_D3_P	INPUT	MIPI Data Lane 3 Differential Pair +
29	FLASH	INPUT	Camera Flash signal
30	RSVD	-	Reserved

Table 7: Pin-out Details of CAM A Connector

Note: The above camera connector pin-out details remain same for CAM C (CN4), CAM E (CN5) and CAM F (CN7).

6.3 Pin-out Details of HEX Board Camera Connector CAM B (CN3)

The following table lists the pin-out details of CAM B connector.

Pin No	Signal Name	Pin Type	Description
1	VCC_3P3	POWER	3.3V Power supply for camera and adaptor boards
2	VCC_3P3	POWER	3.3V Power supply for camera and adaptor boards
3	VCC_1P8	POWER	1.8V Power supply for camera and adaptor boards
4	GND	POWER	Ground signal for digital and analog
5	GND	POWER	Ground signal for digital and analog
6	PWDN	OUTPUT	Camera Power down signal
7	I2C_SCL	OUTPUT	I2C Clock signal
8	I2C_SDA	I/O	I2C Data Signal
9	GND	POWER	Ground signal for digital and analog
10	RSVD	-	Reserved
11	RSVD	-	Reserved
12	TRIGGER	OUTPUT	Camera trigger signal
13	RSVD	-	Reserved
14	GND	POWER	Ground signal for digital and analog
15	MIPI_D1_N	INPUT	MIPI Data Lane 1 Differential Pair -
16	MIPI_D1_P	INPUT	MIPI Data Lane 1 Differential Pair +
17	GND	POWER	Ground signal for digital and analog
18	GND	POWER	Ground signal for digital and analog
19	MIPI_D0_N	INPUT	MIPI Data Lane 0 Differential Pair -
20	MIPI_D0_P	INPUT	MIPI Data Lane 0 Differential Pair +
21	RESET	OUTPUT	Camera reset signal (Active low)
22	GND	POWER	Ground signal for digital and analog
23	RSVD	-	Reserved
24	MIPI_CLK_N	INPUT	MIPI Clock Lane Differential Pair -
25	MIPI_CLK_P	INPUT	MIPI Clock Lane Differential Pair +
26	GND	POWER	Ground signal for digital and analog
27	RSVD	-	Reserved
28	RSVD	-	Reserved
29	FLASH	INPUT	Camera flash signal
30	RSVD	-	Reserved

Table 8: Pin-out Details of CAM B Connector

Note: The above camera connector pin-out details remain same for CAM D (CN6).

7 Connector Part Numbers

The following table lists connectors used in e-CAM80_CUOAGX and its compatible mating connectors.

Connector	Description	Manufacturer	Part Number
e-CAM30_HEXCUXVR_BASE_BRD base board mating connector (CN1) with AGX Orin™ / Xavier™	120-pin SMT Connector with 0.5 mm pitch	Samtec	QTH-060-01-H-D-A-K
e-CAM30_HEXCUXVR_BASE_BRD headers (CN2-CN7) for mating base board with adaptor boards	30-pin receptacle connector with 0.4 mm pitch fully shielded	I-PEX	20682-030E-02
Micro-coaxial cable assembly to connect base board and adaptor board	30 cm length micro-coaxial cable with pin 1 to 1 compatible	I-PEX	81214-530B-300-1
Mating connector for external trigger signal	2 position rectangular housing connector receptacle with 1.00 mm pitch	JST Sales America Inc	SHR-02V-S-B
External trigger connector crimp	Socket contact tin 28-32 AWG crimp	JST Sales America Inc	SSH-003T-P0.2

Table 9: Connector Part Numbers

8 Electrical Specification

The following sections list the electrical specification, recommended operating conditions and power consumption details of e-CAM80_CUOAGX.

The values described in this section are measured in e-con Systems lab and this can be used as reference only. The current measurements are typical values and are subject to change for different camera boards under different conditions. However, these values can be taken as a reference for power estimation and power supply design.

8.1 Recommended Operating Condition

The following table lists the recommended operating condition of e-CAM80_CUOAGX.

Parameter	Typical Operating Voltage
Input Voltage	3.3V

Table 10: Recommended Operating Condition

8.2 Power Consumption Details

The following table lists the power consumption details of e-CAM80_CUOAGX for maximum resolution, maximum frame rate and maximum number of lanes.

Resolution	Frame Rate (fps)	Supply Voltage (V)	Typical Current (mA)	Power Consumption (W)
3840 x 2160 10-bit	60	3.3	1.188	3.9204

Table 11: Power Consumption Details

8.3 Functional Temperature Range

The following table lists the functional temperature range of e-CAM80_CUOAGX.

Temperature Range	Parameter Description
-30°C to 70°C	Electrically functional operating range[1]

Table 12: Functional Temperature Range

Note:

- As temperature increases, the noise level also increases.
- Default lens (optional) supplied with this camera has operating temperature range of -20°C to 60°C. Customers can choose wider operating temperature lens as per their requirements.
- Performance guaranteed temperature range -10°C to 60°C

9 Mechanical Specifications

The camera adaptor board and camera module of e-CAM80_CUOAGX was 30 mm x 30 mm in dimension.

The front and rear views of the e-CAM80_CUOAGX adaptor board and camera base board mechanical dimensions are shown below.

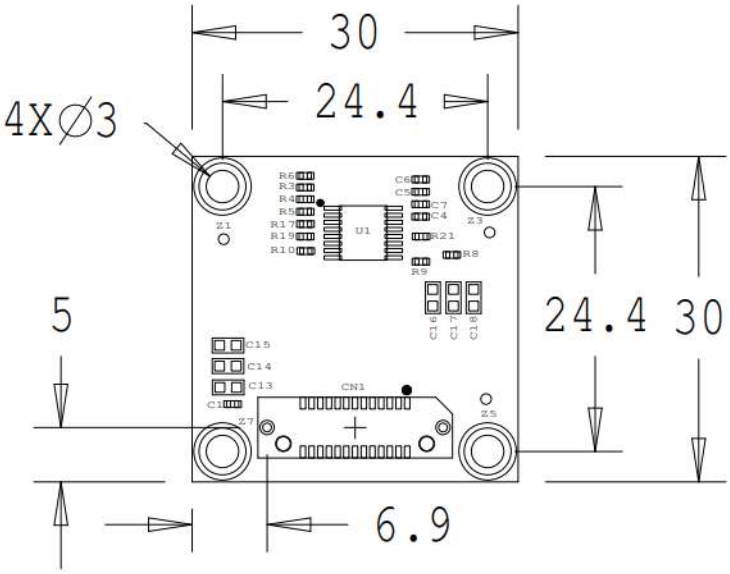

Figure 5: Front view of e-CAM80_CUOAGX Adaptor Board Mechanical Dimensions

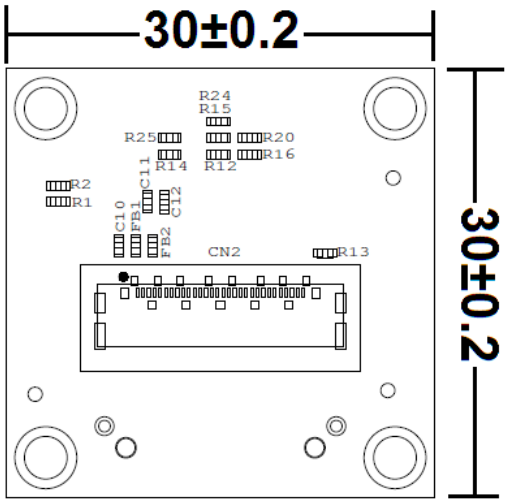

Figure 6: Rear view of e-CAM80_CUOAGX Adaptor Board Mechanical Dimensions

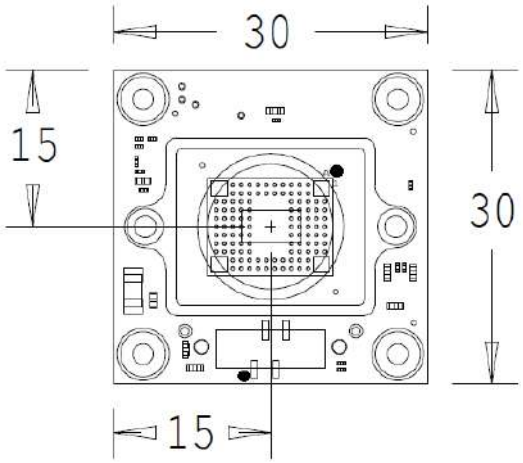

Figure 7: Front View of e-CAM83_CUMI415_MOD Mechanical Drawing

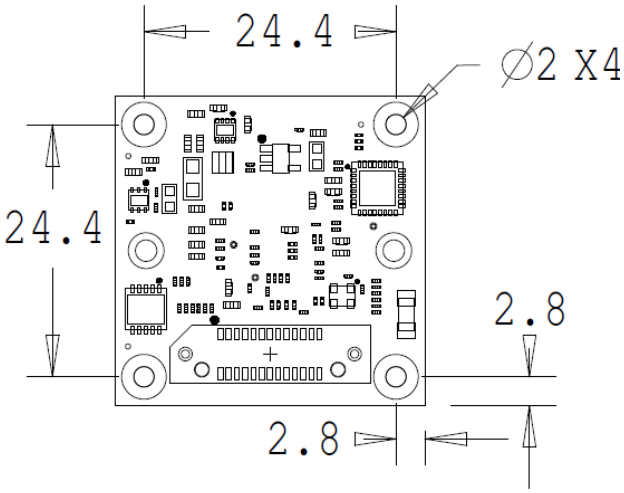

Figure 8: Rear View of e-CAM83_CUMI415_MOD Mechanical Drawing

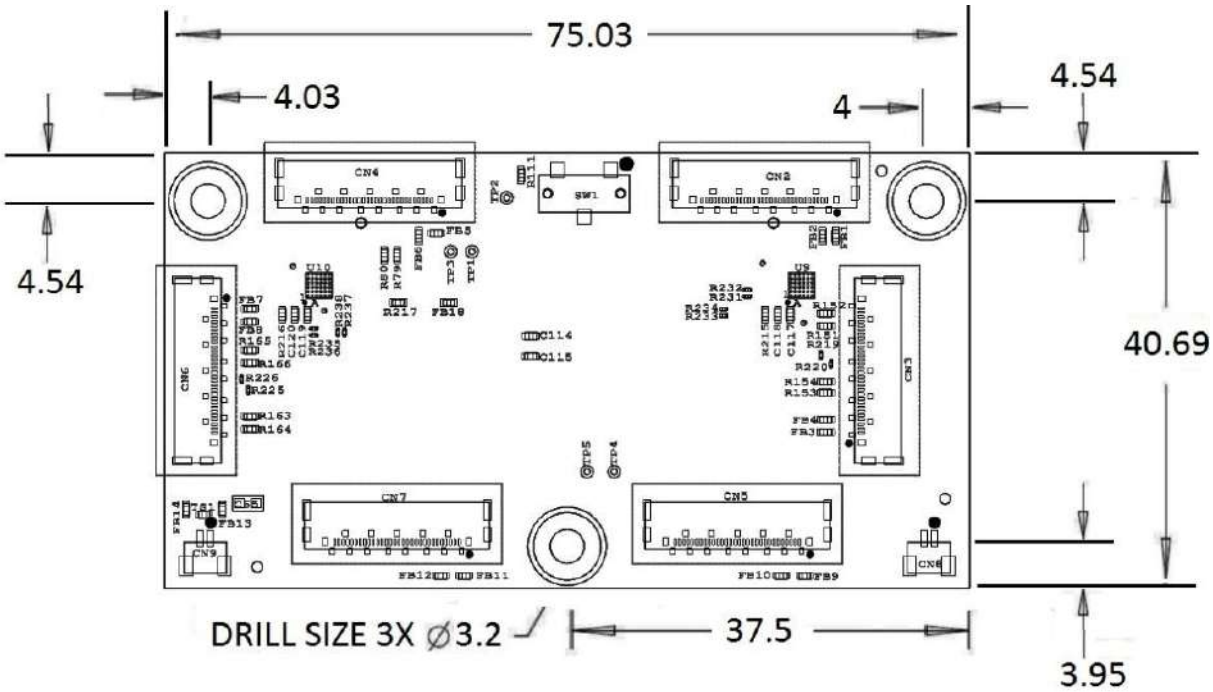

Figure 9: e-CAM80_CUOAGX Camera Base Board Mechanical Dimensions

Note: All dimensions are in mm.

Support

Contact Us

If you need any support on e-CAM80_CUOAGX product, please contact us using the Live Chat option available on our website - https://www.e-consystems.com/

Creating a Ticket

If you need to create a ticket for any type of issue, please visit the ticketing page on our website - https://www.e-consystems.com/create-ticket.asp

RMA

To know about our Return Material Authorization (RMA) policy, please visit the RMA Policy page on our website - https://www.e-consystems.com/RMA-Policy.asp

General Product Warranty Terms

To know about our General Product Warranty Terms, please visit the General Warranty Terms page on our website - https://www.e-consystems.com/warranty.asp