e-CAM80_CUOAGX

Developer Guide

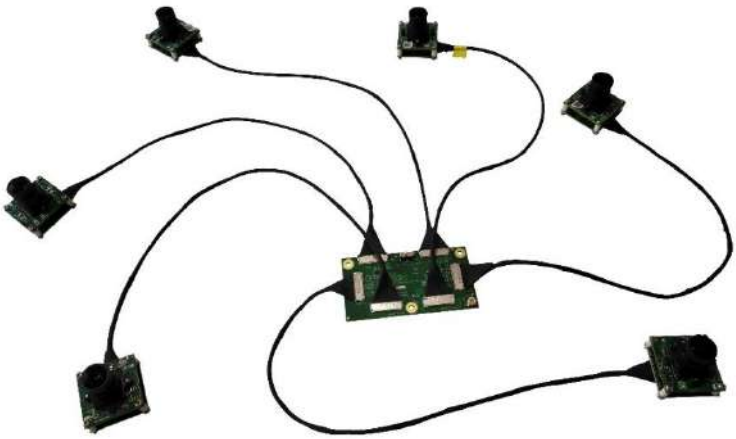

Version 1.3

e-con Systems

6/18/2024

e-con Systems

Think Camera. Think e-con.

Disclaimer

e-con Systems reserves the right to edit/modify this document without any prior intimation of whatsoever.

© Copyright e-con Systems. 2024. All rights reserved.

Contents

INTRODUCTION TO E-CAM80_CUOAGX 3

SOFTWARE REQUIREMENTS 3

PREREQUISITES 4

SETTING UP THE ENVIRONMENT 4
DOWNLOADING THE REQUIREMENTS 5
EXTRACTING AND PREPARING L4T 6
EXTRACTING THE RELEASE PACKAGE 7

INSTALLATION PROCEDURE 8

BUILDING FROM SOURCE 8
DOWNLOADING AND CONFIGURING THE KERNEL 8
BUILDING AND INSTALLING THE KERNEL 9
MODIFYING THE ROOTFS 10
FLASHING THE JETSON AGX ORIN™ DEVELOPMENT KIT 11

LOADING THE DRIVERS 13

INSTALLING SAMPLE APPLICATION 14
USING SAMPLE APPLICATIONS WITH E-CAM80_CUOAGX 14

TROUBLESHOOTING 15

FAQ 16

WHAT'S NEXT? 17

GLOSSARY 18

SUPPORT 19

REVISION HISTORY 20

Introduction to e-CAM80_CUOAGX

e-CAM80_CUOAGX is a new MIPI camera board which helps to connect upto six IMX415 camera modules to the Jetson AGX Orin™ kit. This camera module is designed and developed by e-con Systems, which has over two decades of experience in designing, developing, and manufacturing OEM cameras. The prebuilt driver for this camera along with the camera board is provided by e-con Systems.

The NVIDIA® Jetson AGX Orin™ development kit is a full featured development platform for visual computing and ideal for applications requiring high computational performance in a low power envelope. This development kit is pre-flashed with a Linux environment, includes support for many common APIs, and is supported by NVIDIA® complete development toolchain.

e-CAM80_CUOAGX is an 8 MP color camera with S-mount (also known as M12 board lens) lens holder. The S-mount is small form-factor lens mounts for board cameras. e-CAM80_CUOAGX camera contains 1/2.8" IMX415 sensor from STARVIS family of CMOS image sensor from Sony ®. All the six cameras were interfaced to the J509 connector of the Jetson AGX Orin™ development kit using the e-CAM30_HEXCUXVR_BASE_BRD base board.

e-con Systems also provides the sample applications that demonstrates the features of this camera.

The commands and output messages in this manual are represented by different colors as shown in below table.

Table 1: Notation of Colors

Color	Notation
Blue	Commands running in host PC
Red	Output message in host PC
Green	Output message in Jetson AGX Orin™ development kit
Orange	Commands running in Jetson AGX Orin™ development kit

This document explains how to setup the Jetson AGX Orin™ development kit for using e-CAM80_CUOAGX camera.

Software Requirements

The software requirements are as follows:

- Cross compiler toolchain
- Linux for Tegra (L4T) release package and sample root filesystems (rootfs)

© Copyright e-con Systems. 2024. All rights reserved.

Prerequisites

This section describes the requirements to use e-CAM80_CUOAGX on the Jetson AGX Orin™ development kit.

The prerequisites are as follows:

- Host PC which runs Ubuntu 22.04 (64-bit) or 20.04 (64-bit).
- NVIDIA® provided L4T release and corresponding sample rootfs for Jetson AGX Orin™ development kit.
- A USB cable (Type-C port) to plug into the recovery port of the Jetson AGX Orin™.

Note: USB-C port located on the other side of the board from the power port is used for flashing the board.

Please refer to the *e-CAM80_CUOAGX_Release_Package_Manifest.pdf* to know the contents of release package and their description.

Setting Up the Environment

The steps to set up the environment are as follows:

1. Run the following commands to setup the required environment variables.

```
mkdir top_dir -p
mkdir top_dir/tool_chain
export TOP_DIR=<absolute path to>/top_dir
export RELEASE_PACK_DIR=$TOP_DIR/e-CAM80_CUOAGX_JETSON_AGX_ORIN_<L4T_version>_<release_date>_<release_version>
export L4T_DIR=$TOP_DIR/Linux_for_Tegra
export LDK_ROOTFS_DIR=$TOP_DIR/Linux_for_Tegra/rootfs
export ARCH=arm64
export CROSS_COMPILE=$TOP_DIR/tool_chain/aarch64--glibc--stable-2022.08-1/bin/aarch64-buildroot-linux-gnu-
export NVIDIA_SRC=$L4T_DIR/source/
export TEGRA_KERNEL_OUT=$NVIDIA_SRC/out/nvidia-linux-
header
export KERNEL_HEADERS=$NVIDIA_SRC/kernel/kernel-jammy-src
export INSTALL_MOD_PATH=$LDK_ROOTFS_DIR
```

```
export SENSOR_DRIVER=e-CAM80_CUOAGX
```

2. Run the following command to copy the release package tar file to the staging directory.

```
cp <location of>/e-CAM80_CUOAGX_JETSON_AGX_ORIN_
<L4T_version>_<release_date>_<release_version>.tar.gz
$TOP_DIR
```

Downloading the Requirements

For building the kernel, a cross compiler toolchain and other tools necessary for compiling are required. You need to download the cross compiler toolchain from NVIDIA® website.

The steps to download the requirements for building the kernel are as follows:

1. Download the required toolchain from NVIDIA® website using https://developer.nvidia.com/embedded/downloads link as listed in the following table.

Table 2: GCC Tool Chain Package

S.NO	Title	Version	Download link
1	GCC Tool Chain Kernel	11.3.0	https://developer.nvidia.com/downloads/embedded/l4t/r36_release_v3.0/toolchain/aarch64--glibc--stable-2022.08-1.tar.bz2

   a. Run the following command to extract the package in Host PC.

```
mv ~/Downloads/aarch64--glibc--stable-2022.08-
1.tar.bz2 $TOOL_CHAIN
cd $TOOL_CHAIN
tar -xf aarch64--glibc--stable-2022.08-1.tar.bz2
```

2. Run the following command to download the required package for extracting and building sources.

```
sudo apt-get update
sudo apt-get install build-essential bc lbzip2 qemu-
user-static  python
```

3. Download the required L4T release package and sample rootfs from NVIDIA® website using https://developer.nvidia.com/embedded/downloads link.

   a. Download the packages from the NVIDIA® website as listed in below table.

© Copyright e-con Systems. 2024. All rights reserved.

Table 3: Packages for Jetson AGX Orin™ / Xavier™

S.NO	Title	Version	Download Link
1	L4T AGX R36.3.0 Jetson Driver Package	36.3.0	https://developer.nvidia.com/downloads/embedded/l4t/r36_release_v3.0/release/jetson_linux_r36.3.0_aarch64.tbz2
2	L4T Jetson AGX R36.3.0 Sample Root File System	36.3.0	https://developer.nvidia.com/downloads/embedded/l4t/r36_release_v3.0/release/tegra_linux_sample-root-filesystem_r36.3.0_aarch64.tbz2

b. Run the following commands to copy the downloaded package to staging directory.

```
cp $HOME/Downloads/Jetson_Linux_R36.3.0_aarch64.tbz2 $TOP_DIR
cp $HOME/Downloads/Tegra_Linux_Sample-Root-Filesystem_R36.3.0_aarch64.tbz2 $TOP_DIR
```

Extracting and Preparing L4T

The steps for extracting and preparing L4T must be performed in host PC as follows:

1. Run the following commands to extract the downloaded L4T release package to navigate a folder with the name Linux_for_Tegra.

```
cd $TOP_DIR
tar xf Jetson_Linux_R36.3.0_aarch64.tbz2
```

2. Run the following commands to extract the sample rootfs to the rootfs directory which is present inside the Linux_for_Tegra directory.

```
sudo tar xpf Tegra_Linux_Sample-Root-Filesystem_R36.3.0_aarch64.tbz2 -C Linux_for_Tegra/rootfs/
```

3. Run the following commands to set the package to be ready to flash binaries.

```
cd $L4T_DIR
sudo ./tools/l4t_flash_prerequisites.sh
sudo ./apply_binaries.sh
```

Extracting the Release Package

Run the following commands to extract the e-CAM80_CUOAGX release package.

```
cd $TOP_DIR
tar -xaf e-CAM80_CUOAGX_JETSON_AGX_ORIN_
<L4T_version>_<release_date>_<release_version>.tar.gz
```

To know more about the release package, please refer to the *e-CAM80_CUOAGX_Release_Package_Manifest.pdf*.

Please refer to the *Installation Procedure* section to build kernel with support for e-CAM80_CUOAGX. The procedure would require flashing the eMMC of the Jetson AGX Orin™ development kit.

Note: Flashing will erase the pre-existing contents.

© Copyright e-con Systems. 2024. All rights reserved.

Installation Procedure

This section describes the steps for building and installing the kernel.

Building from Source

You can use a patch file provided by e-con Systems to build your own kernel image binary and modules along with the e-CAM80_CUOAGX camera driver on the Jetson AGX Orin™ development kit.

Downloading and Configuring the Kernel

This section describes how you can download and configure the kernel for Jetson AGX Orin™ development kit.

Download the kernel source code for L4T from the NVIDIA® website using https://developer.nvidia.com/embedded/downloads link.

The steps to download and configure the kernel for Jetson AGX Orin™ development kit are as follows:

1. Download the packages from the NVIDIA® website as listed in below table.

Table 4: Packages for Jetson AGX Orin™ / Xavier™

Title	Version	Download Link
Jetson AGX Orin™ Sources	36.3.0	https://developer.nvidia.com/downloads/embedded/l4t/r36_release_v3.0/sources/public_sources.tbz2

2. Run the following command to copy the downloaded file to staging directory.

```
cp $HOME/Downloads/public_sources.tbz2 $TOP_DIR
```

3. Run the following commands to extract the downloaded kernel source code to any path on the host Linux PC.

```
tar xf public_sources.tbz2
cd $NVIDIA_SRC
```

4. Run the following command to extract the kernel source code.

```
tar xf kernel_src.tbz2
tar xf kernel_oot_modules_src.tbz2
tar xf nvidia_kernel_display_driver_source.tbz2
```

5. Run the following command to make sure that the patch command is applied properly in the nvidia-oot source.

```
patch -p1 -i $RELEASE_PACK_DIR/Kernel/e-CAM80_CUOAGX_JETSON_AGX_ORIN_L4T36.3.0_oot.patch --dry-run
```

6. Run the following command to apply the patch file to the nvidia-oot source code if there is no error from dry-run command.

```
patch -p1 -i $RELEASE_PACK_DIR/Kernel/e-CAM80_CUOAGX_JETSON_AGX_ORIN_L4T36.3.0_oot.patch
```

7. Run the following command to make sure that the patch command is applied properly in the device tree source.

```
patch -p1 -i $RELEASE_PACK_DIR/Kernel/e-CAM80_CUOAGX_JETSON_AGX_ORIN_L4T36.3.0_dtb.patch --dry-run
```

8. Run the following command to apply the patch file to the device tree source code if there is no error from dry-run command.

```
patch -p1 -i $RELEASE_PACK_DIR/Kernel/e-CAM80_CUOAGX_JETSON_AGX_ORIN_L4T36.3.0_dtb.patch
```

9. Run the following command to make sure that the patch command is applied properly in the module source.

```
mkdir -p sensor_driver
patch -d sensor_driver -p1 -i $RELEASE_PACK_DIR/Kernel/e-CAM80_CUOAGX_JETSON_AGX_ORIN_L4T36.3.0_module.patch --dry-run
```

10. Run the following command to apply the patch file to the module source code if there is no error from dry-run command.

```
patch -d sensor_driver -p1 -i $RELEASE_PACK_DIR/Kernel/e-CAM80_CUOAGX_JETSON_AGX_ORIN_L4T36.3.0_module.patch
```

Building and Installing the Kernel

Run the following commands to build and install the kernel image, modules,

Sensor driver and dtbo to the Jetson Orin NX™ SOM.

```
make -C kernel
make modules
sudo -E make modules_install
make dtbs
```

© Copyright e-con Systems. 2024. All rights reserved.

Run the following commands to copy the dtbo file to Linux_for_Tegra (L4T_DIR) flashing path.

For 2 lane configuration,

```
sudo cp $NVIDIA_SRC/nvidia-oot/device-tree/platform/generic-dts/dtbs/tegra234-p3701-0000-p3737-0000-camera-2lane-eimx415.dtbo $LDK_ROOTFS_DIR/boot
```

For 4-lane configuration,

```
sudo cp $NVIDIA_SRC/nvidia-oot/device-tree/platform/generic-dts/dtbs/tegra234-p3701-0000-p3737-0000-camera-4lane-eimx415.dtbo $LDK_ROOTFS_DIR/boot
```

Modifying the Rootfs

Run the following commands to modify additional files in the rootfs for the proper functioning of the e-CAM80_CUOAGX camera on the Jetson AGX Orin™ development kit.

ISP Libraries for Jetson AGX Orin™

```
sudo cp $RELEASE_PACK_DIR/misc/camera_overrides_jetson-orin.isp $LDK_ROOTFS_DIR/var/nvidia/nvcam/settings/camera_overrides.isp -f
```

To change the permission for ISP override file,

```
sudo chmod 664 $LDK_ROOTFS_DIR/var/nvidia/nvcam/settings/camera_overrides.isp

sudo chown root:root $LDK_ROOTFS_DIR/var/nvidia/nvcam/settings/camera_overrides.isp
```

To update the Nvidia provided v4l2-compliance binary to run v4l2-compliance test,

```
sudo cp $RELEASE_PACK_DIR/misc/v4l2-compliance $LDK_ROOTFS_DIR/usr/local/bin/ -f
sudo chmod +x $LDK_ROOTFS_DIR/usr/local/bin/v4l2-compliance
```

Note: To achieve the best image quality, the ISP has been tuned by e-con Systems in collaboration with NVIDIA®, specific to e-CAM80_CUOAGX and the ISP configuration file is **camera_overrides.isp** file.

Flashing the Jetson AGX Orin™ Development Kit

The steps to flash the Jetson AGX Orin™ development kit are as follows:

1. Connect Jetson AGX Orin™ Development kit to the host pc with the "USB Type-A to Type-C" cable next to 40-pin connector on Jetson AGX Orin™ Development Kit for flashing.

   The location of USB-C port on the Jetson AGX Orin™ development kit is shown in below figure.

Figure 1: Location of USB-C Port on Jetson AGX Orin™ Development Kit

   Note: USB-C port located on the other side of the board from the power port is used for flashing the board.

2. Set the board to recovery mode, as mentioned in below steps:

   a. Press and hold the **Recovery** button of Jetson AGX Orin™ development kit.
   b. Press the **Power** button of Jetson AGX Orin™ development kit.

   The location of **Recovery** and **Power** buttons on the Jetson AGX Orin™ development kit is shown in below figure.

© Copyright e-con Systems. 2024. All rights reserved.

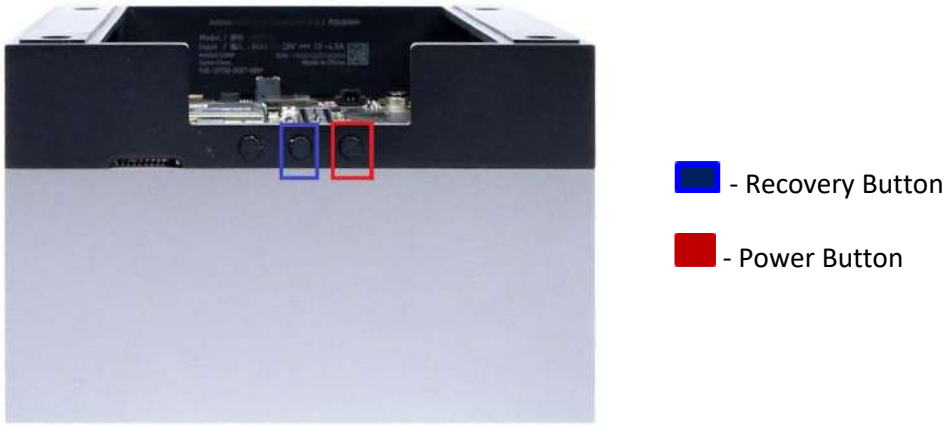

Figure 2: Location of Recovery and Power Buttons on Jetson AGX Orin Development Kit

c. Release both **Recovery** and **Power** buttons.

If the board is successfully changed to recovery mode, the Jetson AGX Orin™ development kit will be enumerated as an USB device to the host PC.

3. Run the following command to verify whether the board is in recovery mode.

```
lsusb
```

The output message appears as shown below.

```
Bus <bbb> Device <ddd>: ID 0955:7023 NVidia Corp.
      Where:
      <bbb> = is any three-digit number.
      <ddd> = is any three-digit number.
```

4. Run the following commands to flash the Jetson AGX Orin™ development kit from your host PC.

```
cd $L4T_DIR
sudo ./flash.sh jetson-agx-orin-devkit internal
```

Note: Now, the entire eMMC on the Jetson AGX Orin™ development kit and any files present on the device will be erased. It will take about 10-30 minutes to complete depending on the host PC configuration.

5. Configure the Jetson AGX Orin™ device once after complete flashing.

Loading the Drivers

This section describes how to load the drivers for e-CAM80_CUOAGX.

The module drivers for e-CAM80_CUOAGX will be loaded automatically in the Jetson AGX Orin™ development kit during booting.

1. The steps to load the drivers are as follows:Run the following command to select e-CAM80_CUOAGX device tree
   overlay file for 2 lane.

   ```
   sudo /opt/nvidia/jetson-io/config-by-hardware.py -n
   2="Jetson camera EIMX415 2lane"
   ```

   the output message appears as shown below,

   ```
   Modified /boot/extlinux/extlinux.conf to add following
   DTBO entries:
   /boot/tegra234-p3701-0000-p3737-0000-camera-2lane-
   eimx415.dtbo
   Reboot system to reconfigure.
   ```

2. Run the following command to select e-CAM80_CUOAGX device tree
   overlay file for 4 lane.

   ```
   sudo /opt/nvidia/jetson-io/config-by-hardware.py -n
   2="Jetson camera EIMX415 4lane"
   ```

   the output message appears as shown below,

   ```
   Modified /boot/extlinux/extlinux.conf to add following
   DTBO entries:
   /boot/tegra234-p3701-0000-p3737-0000-camera-4lane-
   eimx415.dtbo
   Reboot system to reconfigure.
   ```

3. Run the following command to check whether all the six cameras are initialized.

   ```
   sudo dmesg | grep "Detected eimx415 sensor"
   ```

   The output message appears as shown below.

   ```
   Detected eimx415 sensor
   ```

   The output message indicates that all six cameras are initialized properly. The number of entries and number of connected cameras should be equal.

3. Run the following command to check the presence of video nodes based on number of cameras connected. (here assumed six cameras connected)

© Copyright e-con Systems. 2024. All rights reserved.

```
ls /dev/video*
```

The output message appears as shown below.

```
/dev/video0
```

The number of video nodes and number of connected cameras should be equal.

Installing Sample Application

e-con Systems shares a camera application, called eCAM_argus_camera (based on NVIDIA® sample camera application, argus_camera, for Jetson AGX Orin™ development kit) along with the e-CAM80_CUOAGX camera. In eCAM_argus_camera, e-con Systems has customized and retained only features applicable to the e-CAM80_CUOAGX from NVIDIA® argus_camera application.

The eCAM_argus_camera is a video viewer and capture software for the camera driver on the Jetson AGX Orin™ development kit, customized to demonstrate the features of e-CAM80_CUOAGX.

- Please refer to the *e-CAM80_CUOAGX eCAM _Argus_Camera Build and Installation Guide_<ver>.pdf* for the procedure to build and install the eCAM_argus_camera application.

Using Sample Applications with e-CAM80_CUOAGX

Please refer to the *e-CAM80_CUOAGX_Linux_App_User_Manual_Rev_<ver>.pdf* to use eCAM_argus_camera application.

Troubleshooting

In this section, you can view the commonly occurring issue and its troubleshooting step.

After flashing the Jetson™ development kit, board is not booting, or the display is blank. How to solve this issue?

To solve this issue, please perform the following:

- Use the correct command with sudo permission whenever needed to extract the package.
- Use the PC with Ubuntu 20.04 or 22.04 64-bit for flashing.
- Maintain enough free space in hard disk before flashing.

Monitor display is in blue colour when kit is booted after successful flashing.
This is a known issue and mentioned in Nvidia release notes.
Please recheck your HDMI cable
The Cable Creation branded DP-to-HDMI converter does not work as expected with Jetson AGX Orin.
We recommend that you use a different DP-to-HDMI convertor.

© Copyright e-con Systems. 2024. All rights reserved.

FAQ

1. **How can I get the updated package?**

   To download the updated package, please refer to the "Download Release Package" section in the *e-CAM80_CUOAGX_Release_Notes_<Rev>.pdf*

2. **Can I connect cameras to any of available six connectors?**

   Yes, if you are using 2-lane configuration, you can connect any required quantity from 1 to 6 cameras to the connectors as shown in below figure or else if you are using 4-lane configuration, you have to connect it in CN2, CN4, CN5 and CN7 only.

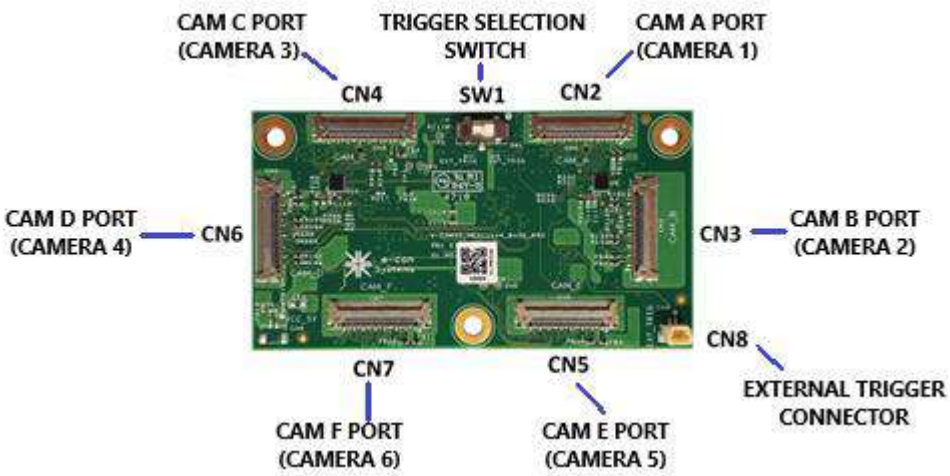

What’s Next?

After understanding how to setup the Jetson AGX Orin™ development kit using e-CAM80_CUOAGX MIPI camera, you can refer to the following documents to understand more about e-CAM80_CUOAGX.

- *e-CAM80_CUOAGX Release Package Manifest*
- *e-CAM80_CUOAGX Release Notes*
- *e-CAM80_CUOAGX eCAM_Argus_Camera Build and Install Guide*
- *e-CAM80_CUOAGX eCAM_Argus_Camera_App User Manual*

© Copyright e-con Systems. 2024. All rights reserved.

Glossary

API: Application Programming Interface.

CMOS: Complementary Metal Oxide Semiconductor.

DTB: Device Tree Blob.

eMMC: Embedded Multi-Media Controller.

GIMP: GNU Image Manipulation Program.

GNU: GNU's Not Unix.

GTK: GIMP Toolkit.

GUI: Graphical User Interface.

MIPI: Mobile Industry Processor Interface.

Rootfs: Root Filesystems.

USB: Universal Serial Bus.

V4L2: Video4Linux2 is a collection of device drivers and API for supporting real-time video capture on Linux systems.

Support

Contact Us

If you need any support on e-CAM80_CUOAGX product, please contact us using the Live Chat option available on our website - https://www.e-consystems.com/

Creating a Ticket

If you need to create a ticket for any type of issue, please visit the ticketing page on our website - https://www.e-consystems.com/create-ticket.asp

RMA

To know about our Return Material Authorization (RMA) policy, please visit the RMA Policy page on our website - https://www.e-consystems.com/RMA-Policy.asp

General Product Warranty Terms

To know about our General Product Warranty Terms, please visit the General Warranty Terms page on our website - https://www.e-consystems.com/warranty.asp

© Copyright e-con Systems. 2024. All rights reserved.

Revision History

Rev	Date	Description	Author
1.0	10-Mar-2023	Initial draft	Product Marketing Team
1.1	18-Jan-2024	Updated to L4T35.4.1 for Jetson AGX Orin™/ Xavier™ development kit	Camera Dev Team
1.2	09-Apr-2024	Updated commands and “Troubleshooting & What’s Next” sections	Camera Dev Team
1.3	18-Jun-2024	Updated to L4T36.3.0	Camera Dev Team