e-CAM80_CUOAGX

Getting Started Manual

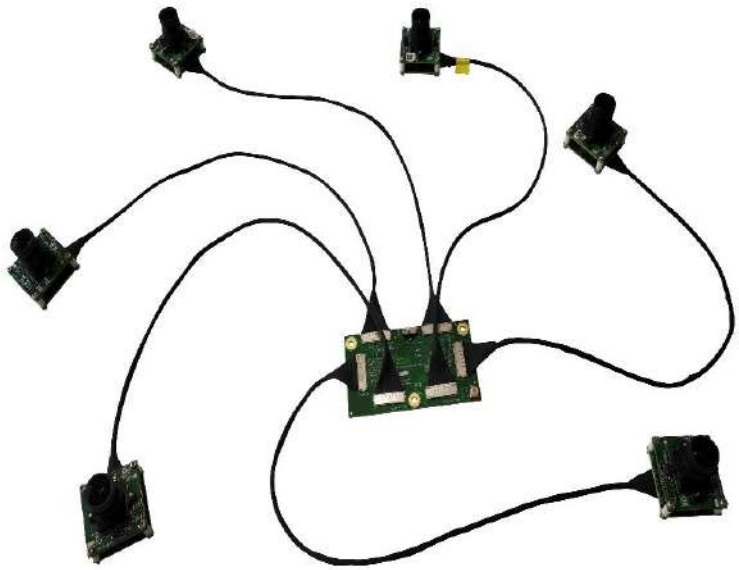

e-con Systems

Think Camera. Think e-con.

Version 1.3

e-con Systems

6/18/2024

Disclaimer

The specifications of e-CAM80_CUOAGX board and instructions on how to use this multi-camera board with Jetson AGX Orin™ development kit is provided as reference only and e-con Systems reserves the right to edit/modify this document without any prior intimation of whatsoever.

© Copyright e-con Systems. 2024. All rights reserved.

Contents

INTRODUCTION TO E-CAM80_CUOAGX 3

PREREQUISITES 4
PARTS SUPPLIED 4
DESCRIPTION 5

E-CAM80_CUOAGX BOARD HANDLING PROCEDURE 7

SOFTWARE QUICK SETUP 10

REFERENCE DOCUMENTS 13

SOFTWARE DOCUMENTS 13
HARDWARE DOCUMENTS 13

TROUBLESHOOTING 15

FAQ 16

WHAT'S NEXT? 17

GLOSSARY 18

SUPPORT 19

Introduction to e-CAM80_CUOAGX

e-CAM80_CUOAGX is a new MIPI camera board which helps to connect upto six IMX415 camera modules to the Jetson AGX Orin™ kit launched by e-con Systems, which has over two decades of experience in designing, developing, and manufacturing OEM cameras. The prebuild driver for this camera along with the camera board is provided by e-con Systems.

The NVIDIA® Jetson AGX Orin™ development kit is a full featured development platform for visual computing and ideal for applications requiring high computational performance in a low power envelope. This development kit is pre-flashed with a Linux environment, includes support for many common APIs, and is supported by NVIDIA® complete development toolchain.

e-CAM80_CUOAGX is an 8 MP color camera with S-mount (also known as M12 board lens) lens holder. The S-mount is small form-factor lens mounts for board cameras. e-CAM80_CUOAGX camera contains 1/2.8" IMX415 sensor from STARVIS family of CMOS image sensor from Sony ®. The IMX415 is a 1/2.8" optical form-factor, CMOS image sensor with a variable speed shutter. It is a colour camera that delivers RGB RAW data All the six cameras were interfaced to the J509 connector of the Jetson AGX Orin™ development kit using the e-CAM30_HEXCUXVR_BASE_BRD base board.

e-con Systems also provides the sample applications that demonstrates the features of this camera. However, this camera can utilize any Video for Linux version 2 (V4L2) application.

The supported resolutions and frame rates are listed in following tables.

Table 1: Supported Resolutions and Frame Rates in 2 Lane Mode

S.No	Resolution	Frame Rate (fps)
1	3840 x 2160 (12 BPP)	30
2	3840x2160 (10 BPP)	60
3	1920 x 1080* (12 BPP)	60
4	1280 x 720** (12 BPP)	89

Table 2: Supported Resolutions and Frame Rates in 4 Lane Mode

S.No	Resolution	Frame Rate (fps)
1	3840 x 2160 (12 BPP)	16
2	3840x2160 (10 BPP)	30
3	1920 x 1080* (12 BPP)	32
4	1280 x 720** (12 BPP)	48

(*) - 1944 x 1096 is cropped to 1920 x 1080 on the application end to skip the dummy bytes. 1944 x 1096 will be referred to as 1920 x 1080 throughout the document.

© Copyright e-con Systems. 2024. All rights reserved.

(**) - 1296 x 732 is cropped to 1280 x 720 on the application end to skip the dummy bytes. 1296 x 732 is obtained from the sensor through centre cropping and binning. 1296 x 732 will be referred to as 1280 x 720 throughout the document.

Prerequisites

The prerequisites are as follows:

- A Host PC running Ubuntu 22.04 or 20.04 (64-bit) Operating System
- Necessary accessories such as keyboard, mouse, HDMI monitor and so on, are required to be connected to Jetson AGX Orin™ development kit.

Parts Supplied

The following table lists the parts supplied with the kit.

Table 2: Parts Supplied and its Quantities.

Parts Supplied	Images	Quantity
Custom Lens Camera Module (e-CAM83_CUMI415_MOD)		6
Base Board (e-CAM30_HEXCUXVR_BASE_BRD)		1
Micro-Coaxial Cable		6

Adaptor Board (e-CAM80_CUMI334_ADP)		6

Description

NVIDIA® Jetson AGX Orin™ are newly launched small size, low power, artificial intelligence (AI) system-based evaluation boards, developed by NVIDIA®. Orin™ platform supports up to maximum of six 2-lane and four 4-lane MIPI CSI camera interfaces. Up to six individual 2 lane cameras and four individual 4 lane cameras can be connected with e-CAM80_CUOAGX.

e-CAM80_CUOAGX is a multi-board solution, which has three boards as follows:

- Camera module (e-CAM83_CUMI415_MOD)
- Adaptor board (e-CAM80_CUMI334_ADP_H01R2)
- Camera base board (e-CAM30_HEXCUXVR_BASE_H02R1)

The e-CAM30_HEXCUXVR_BASE_BRD base board has one 120-pin Samtec connector (CN1) and six 30-pin micro-coaxial connectors (CN2-CN7) as shown in below figures.

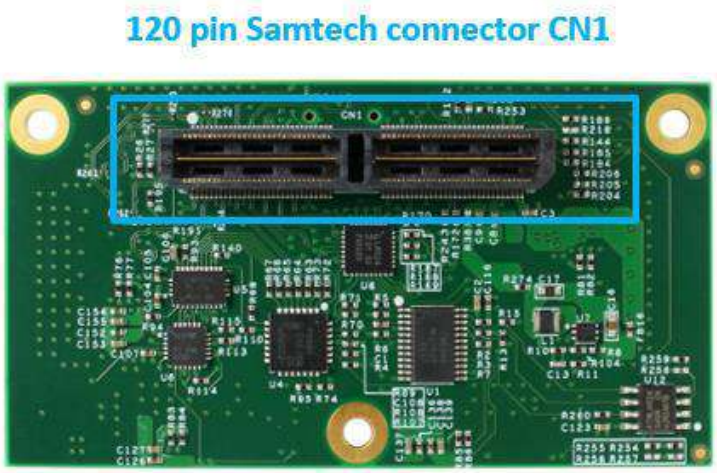

Figure 1: Rear View of e-CAM30_HEXCUXVR_BASE_BRD Base Board

© Copyright e-con Systems. 2024. All rights reserved.

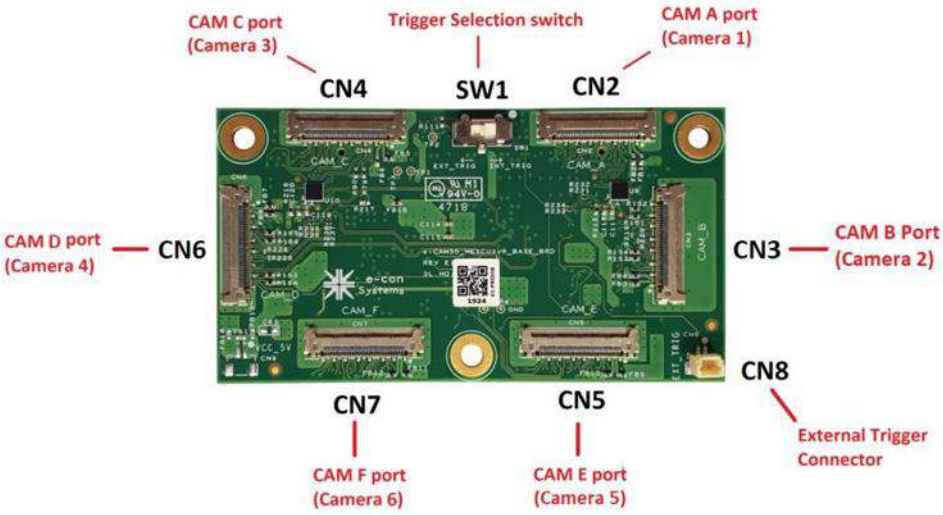

Figure 2: Front View of e-CAM30_HEXCUXVR_BASE_BRD Base Board

The CN1 connector can be directly mated with J509 connector of Jetson AGX Orin™ development kit. The CN2 to CN7 connectors can be interfaced with adaptor boards through 30 cm micro-coaxial cable. The rear view of e-CAM80_CUMI334_ADP adaptor board is shown in below figure.

Figure 3: Rear View of e-CAM80_CUMI334_ADP Adaptor Board

The procedure to assemble all four camera boards are as follows:

Connecting with Jetson AGX Orin Development kit

1. Insert the e-CAM80_CUOAGX board CN1 connector to the J509 camera connector of the Jetson AGX Orin™ development kit before powering ON the Jetson AGX Orin™ development kit.

   The e-CAM30_HEXCUXVR_BASE_BRD base board location in Jetson AGX Orin™ development kit is shown in below figure.

Figure 4: e-CAM30_HEXCUXVR Base Board Location in Jetson AGX Orin Development Kit

   Note: The CN1.1 pin must mate with J509.1 pin.

2. Interface the four adaptor boards to the base board using the provided four micro-coaxial cables.

   The supplied micro-coaxial cable is shown in below figure.

Figure 5: Micro-Coaxial Cable

© Copyright e-con Systems. 2024. All rights reserved.

3. Connect the micro-coaxial cable to the adaptor board connector and base board connector.

   The micro-coaxial cable connected to the adapter board connector is shown in below figure.

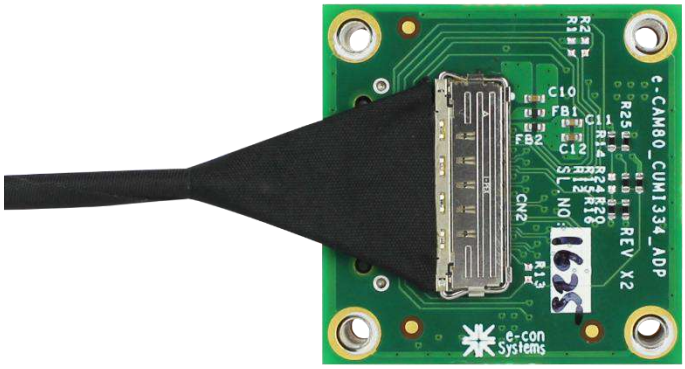

Figure 6: Micro-Coaxial Cable connected to Adapter Board Connector

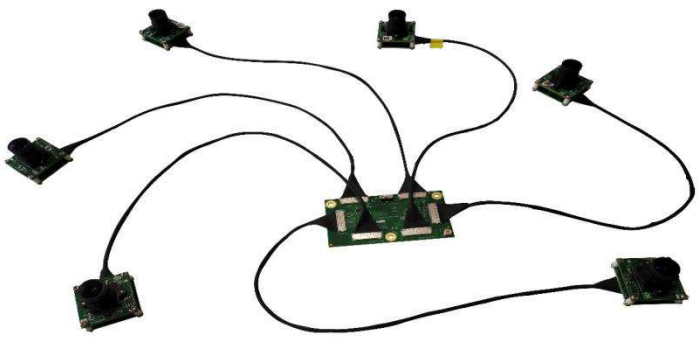

Figure 7: Six camera connection to PORTS -A-F

4. Connect 20V, 4.5A supply to DC jack to power-up the Jetson AGX Orin™ development kit.
5. Press the power switch of Jetson AGX Orin™ development kit to boot the device.

   The location of power switch on the Jetson AGX Orin™ development kit is shown in below figure.

Figure 8: Location of Power Switch on Jetson AGX Orin Development Kit

After powering ON the Jetson AGX Orin™ development kit, the White color LED on Jetson AGX Orin™ development kit will glow. This serves as an indication for power-up of base board as shown in below figure.

Figure 9: Status LED indicating Jetson AGX Orin Development Kit Powered ON

© Copyright e-con Systems. 2024. All rights reserved.

Software Quick Setup

This section describes the extracting and flashing of e-con Systems provided binaries.

The commands and output messages in this manual are represented by different colors as shown in below table.

Table 3: Notation of Colors

Color	Notation
Blue	Commands running in Host PC
Red	Commands running in Development Board
Orange	Output message in Development Board

Before extracting and flashing the e-con provided binaries in Jetson AGX Orin™ development kit, follow these steps to

Flash **the Jetpack 6.0.0** provided by NVIDIA®, using the SDK Manager.

1. Download the SDK Manager using the link https://developer.nvidia.com/nvidia-sdk-manager

2. Sign up to an account in NVIDIA® developer site to use the SDK Manager.

3. Run the following command to install the SDK Manager in the host PC.

```
sudo apt-get install ./sdk-manager-
[version].[build#].deb
```

After installing the SDK Manager in the host PC, follow the instructions in the below link to flash the Jetson™ development kit with **Jetpack 6.0.0**

https://docs.nvidia.com/sdk-manager/install-with-sdkm-jetson/index.html

4. Copy the release package into the HOME Directory of the flashed Jetson™ development kit.

To extract and flash the binaries, follow these steps:

1. Run the following commands to extract the release package in the Jetson™ development kit to obtain the binaries.

```
tar -xaf e-
CAM80_CUOAGX_JETSON_AGX_ORIN_<L4T_version>_<release_date>_<release_
version>.tar.gz

cd e-
CAM80_CUOAGX_JETSON_AGX_ORIN_<L4T_version>_<release_date>_<release_
version>
```

2. Run the following commands in the Jetson AGX Orin™ development kit to install e-con provided binaries with support for e-CAM80_CUOAGX.

```
sudo chmod +x ./install_binaries.sh
sudo -E  ./install_binaries.sh
```

This script will prompt you to choose 2-lane or 4-lane mode. After selection, It will reboot the Jetson AGX Orin™ development kit automatically after installing the binaries successfully.

The steps to be followed in the development board for launching the application are as follows:

1. Run the following command to check whether all the connected cameras are initialized (here assumed six cameras connected).

```
sudo dmesg | grep -i "Detected eimx415 sensor"
```

The output message appears as shown below.

```
Detected eimx415 sensor
Detected eimx415 sensor
Detected eimx415 sensor
Detected eimx415 sensor
Detected eimx415 sensor
Detected eimx415 sensor
```

Note: The above output message is displayed when we connect six cameras.

2. Run the following command to check the presence of six video nodes.

```
ls /dev/video*
```

The output message appears as shown below.

```
/dev/video0
/dev/video1
/dev/video2
/dev/video3
/dev/video4
/dev/video5
```

Note: The number of video node entries will be the same as the number of connected cameras

3. Run the following command to set the power mode to maximum for better performance.

© Copyright e-con Systems. 2024. All rights reserved.

```
sudo nvpmodel -m 0
```

4. Run the following Jetson clocks command before launching the eCAM_Argus_Camera application in the Jetson AGX Orin™development board.

```
sudo jetson_clocks
```

5. Run the following command to launch the sample camera application.

```
eCAM_argus_camera
```

Reference Documents

This section describes the software and hardware documents of e-CAM80_CUOAGX.

Software Documents

The software documents and its description are listed in following table.

Table 4: Description of Software Documents

S.NO	What I need	Documents to Refer
1	View the camera stream and change the camera controls using GUI.	e-CAM80_CUOAGX_eCAM_Argus_Camera_App_User_Manual_<REV>.pdf
2	Build and install the GUI based eCAM_Argus_Camera application.	e-CAM80_CUOAGX_eCAM_Argus_Camera_Build_and_Install_Guide_<REV>.pdf
3	Use GStreamer to control the e-CAM80_CUOAGX camera on the Jetson AGX Orin™development kit.	e-CAM80_CUOAGX_GStreamer_Usage_Guide_<REV>.pdf
4	Build custom kernel with support for using e-CAM80_CUOAGX.	e-CAM80_CUOAGX_Developer_Guide_<REV>.pdf
5	Information about the directory structure and contents of the release package for e-CAM80_CUOAGX.	e-CAM80_CUOAGX_Release_Package_Manifest_<REV>.pdf
6	Information about the module MCU protocol for e-CAM80_CUOAGX.	e-CAM83_CUMI415_MOD_MCU_Protocol_App_Note_Rev_1_0.pdf

Hardware Documents

The hardware documents and its description are listed in following table.

Table 5: Description of Hardware Documents

S.NO	Documents Name	Description
1	e-CAM80_CUOAGX_Datasheet_<REV>.pdf	Describes the features, connector pin-out details and mechanical dimensions of e-CAM80_CUOAGX.
2	e-CAM83_CUMI415_MOD_Datasheet_<REV>.pdf	Describes the features and specification of e-CAM83_CUMI415_MOD camera module.

© Copyright e-con Systems. 2024. All rights reserved.

3	e-CAM80_CUOAGX_Lens_Datasheet_<REV>.pdf	Describes the optical specification of lenses used in e-CAM80_CUOAGX.

Troubleshooting

In this section, you can view the commonly occurring issue and its troubleshooting step.

After flashing the Jetson™ development kit, board is not booting, or the display is blank. How to solve this issue?

To solve this issue, please perform the following:

- Use the correct command with sudo permission whenever needed to extract the package.
- Use the PC with Ubuntu 22.04 or 20.04 64-bit for flashing.
- Maintain enough free space in hard disk before flashing.

After flashing the Jetson™ development kit, repeated booting, or the display is blank in blue color. How to solve this issue?

This is a known issue and mentioned in Nvidia release notes. Please recheck your HDMI cable.
The **Cable creation** branded **DP-to-HDMI** converter does not work as expected with Jetson AGX Orin. We recommend that you use a different **DP-to-HDMI** converter.

© Copyright e-con Systems. 2024. All rights reserved.

FAQ

1. **Why are six cameras used in NVIDIA® Jetson AGX Orin™ development kit?**

   With powerful processing capabilities and high number of camera support, the NVIDIA® Jetson AGX Orin™ development kit is ideal for developing high-end multimedia devices in a small form factor. e-CAM80_CUOAGX camera uses up to six 2-lane MIPI cameras to stream 8 MP resolution at 16fps.

2. **Does e-con Systems have any plan to support longer length cable?**

   Currently, e-con Systems provide a very flexible and robust 30 cm micro-coaxial cable along with this kit. For customization, please write to camerasolutions@e-consystems.com with your requirement.

3. **Does the e-CAM80_CUOAGX camera support OpenCV?**

   e-CAM80_CUOAGX works using Video4Linux2 (V4L2) APIs and is V4L2 compliant. So, any V4L2 based application can be used to access this camera.

   OpenCV is also compatible since it uses V4L2 to access the camera.

   Please refer to https://www.econsystems.com/Articles/Camera/accessing_cameras_in_opencv_with_high_performance.asp for detailed information about OpenCV support in e-con Systems cameras.

4. **How can I get the updated package?**

   To download the updated package, please refer to the "*Download Release Package*" section in the *e-CAM80_CUOAGX_Release_Notes_<Rev>.pdf*

5. **Can I connect cameras in any of available six connectors?**

   Yes, you can connect camera in any of the six available camera ports only when you are using 2-lane configuration.

What's Next?

After understanding the specifications of camera daughter board and instructions on how to use this daughter board with Jetson AGX Orin™ development kit, you can refer to the following documents to understand more about e-CAM80_CUOAGX.

- *e-CAM80_CUOAGX Developer Guide*
- *e-CAM80_CUOAGX eCAM_Argus_Camera_App User Manual*

© Copyright e-con Systems. 2024. All rights reserved.

Glossary

AI: Artificial Intelligence.

API: Application Program Interface.

CMOS: Complementary Metal Oxide Semiconductor.

CSI: Camera Serial Interface.

GUI: Graphical User Interface.

LED: Light-Emitting Diode.

MCU: Micro Controller Unit.

MIPI: Mobile Industry Processor Interface.

USB: Universal Serial Bus.

V4L2: Video4Linux2 is a collection of device drivers and API for supporting real-time video capture on Linux systems.

Support

Contact Us

If you need any support on e-CAM80_CUOAGX product, please contact us using the Live Chat option available on our website - https://www.e-consystems.com/

Creating a Ticket

If you need to create a ticket for any type of issue, please visit the ticketing page on our website - https://www.e-consystems.com/create-ticket.asp

RMA

To know about our Return Material Authorization (RMA) policy, please visit the RMA Policy page on our website - https://www.e-consystems.com/RMA-Policy.asp

General Product Warranty Terms

To know about our General Product Warranty Terms, please visit the General Warranty Terms page on our website - https://www.e-consystems.com/warranty.asp

© Copyright e-con Systems. 2024. All rights reserved.

Revision History

Rev	Date	Description	Author
1.0	10-Mar-2023	Initial draft	Product Marketing Team
1.1	23-Jan-2024	Updated to L4T35.4.1, FPS details and images updated	Camera Dev Team
1.2	09-Apr-2024	Updated “Troubleshooting & Software Documents” section	Camera Dev Team
1.3	18-Jun-2024	Updated Jetpack version to JP6.0.0	Camera Dev Team