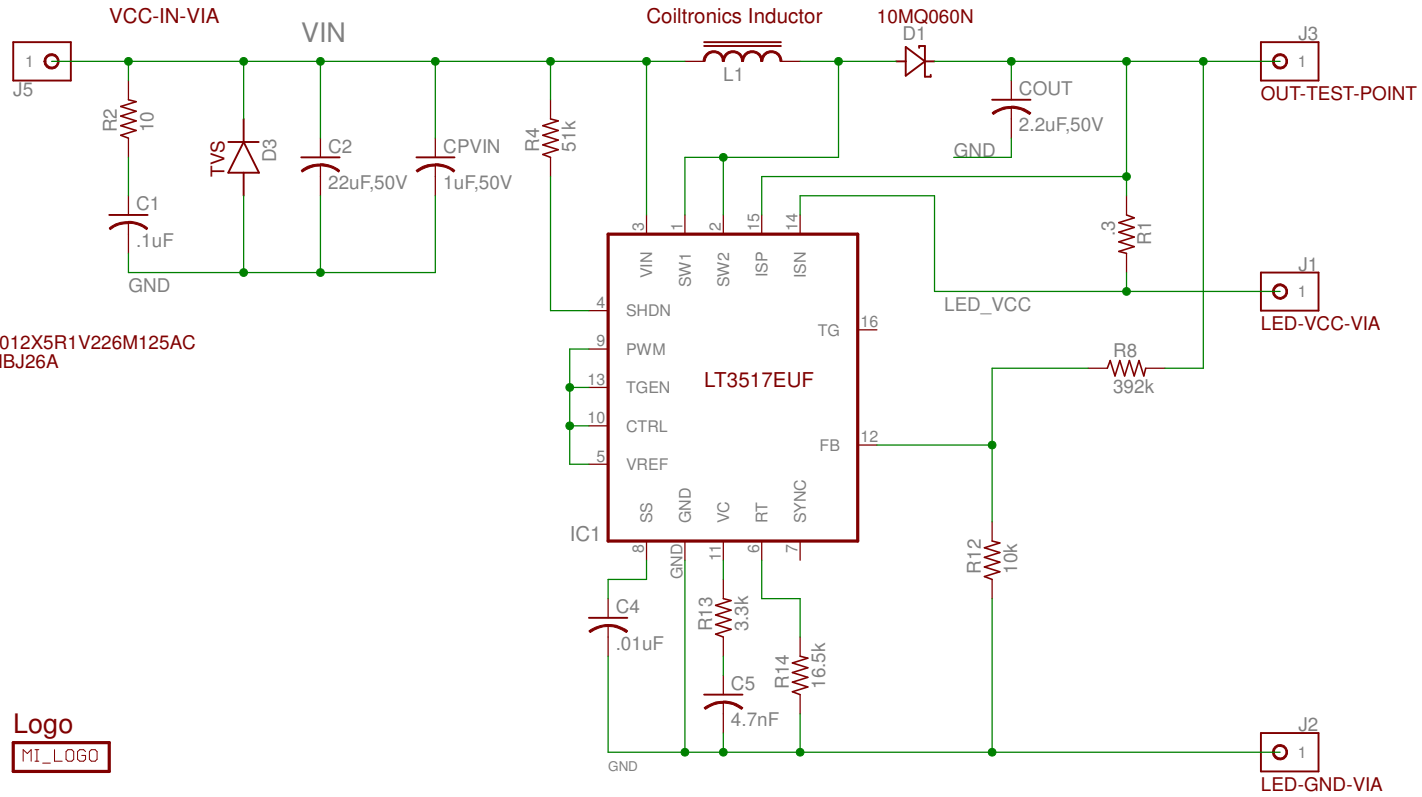

C2 Part No: C2012X5R1V226M125AC
D3 Par No: SMBJ26A

Name

MI_LOGO

Logo

MI_LOGO

REV B Changes:

R11 was removed from the PWN, TGEN, CTRL and VREF pins
TVS was added to VIN
VIN was changed to Through Hole, no more pads for daisy chaining
Sync test point removed
Logo Added
New Inductor replaces old one
4 Layer Board, Inner layers are GND
Added RC circuit to VIN

General Notes:

OUT have has an 18AWG test point. This won't look larger than a small via, but may be useful

Macris Industries LED Driver	Engineer:TMS
TITLE: MI_LED_Driver_B	Author:TMS
Document Number:	Rev: A
Release Date: December, 2013	Sheet: 1/1