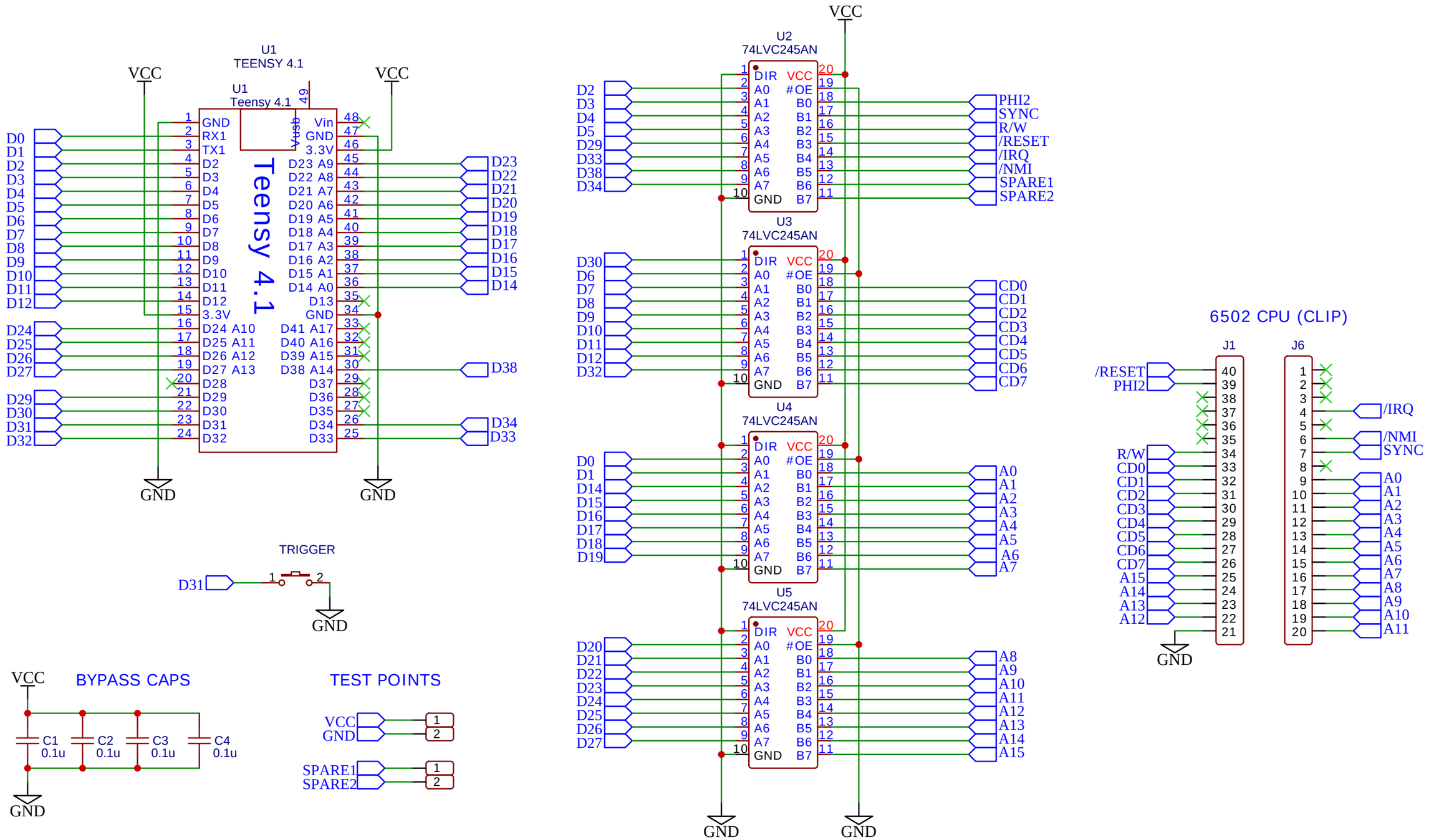

TITLE: 6502 Logic Analyzer		REV: 0.2
EasyEDA	Company: Jeff Tranter	Sheet: 1/3
	Date: 2021-06-05 Drawn By: JJT	

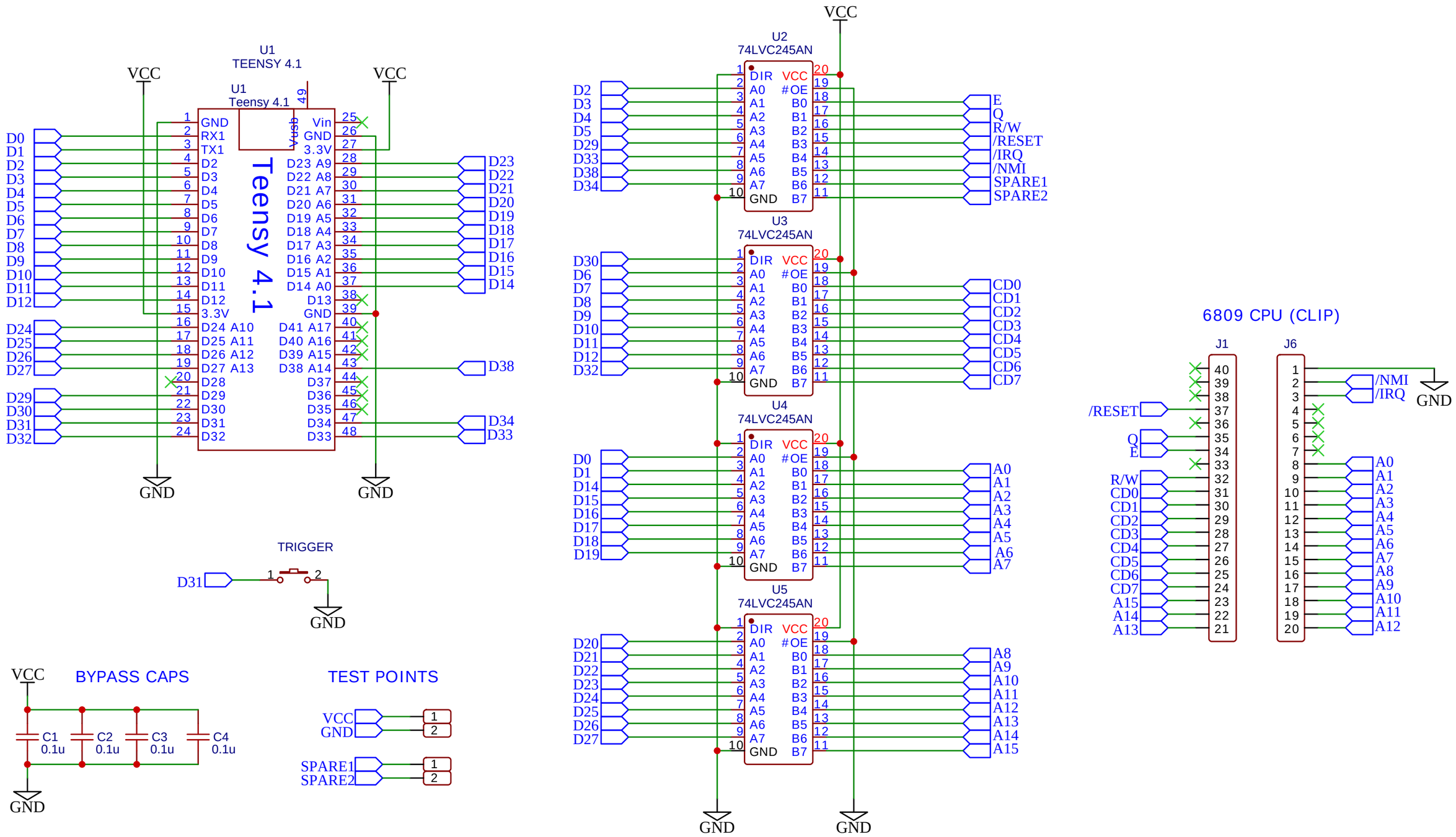

TITLE: 6809 Logic Analyzer	REV: 0.2
EasyEDA Company: Jeff Tranter	Sheet: 2/3
Date: 2021-06-05 Drawn By: JJT	

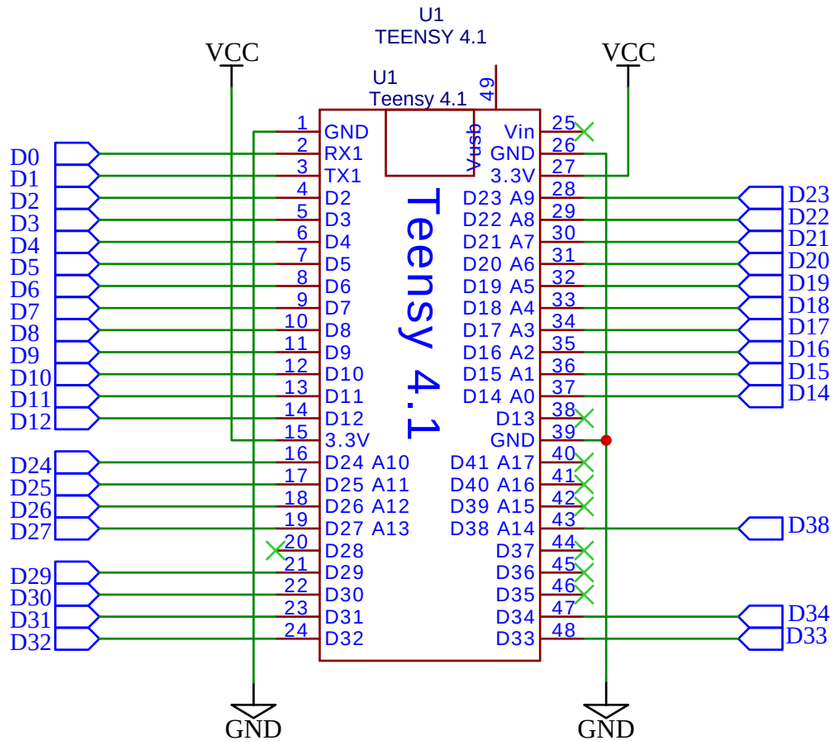

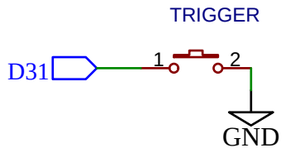

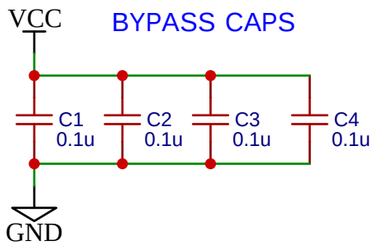

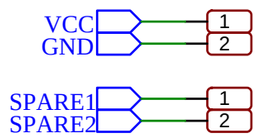

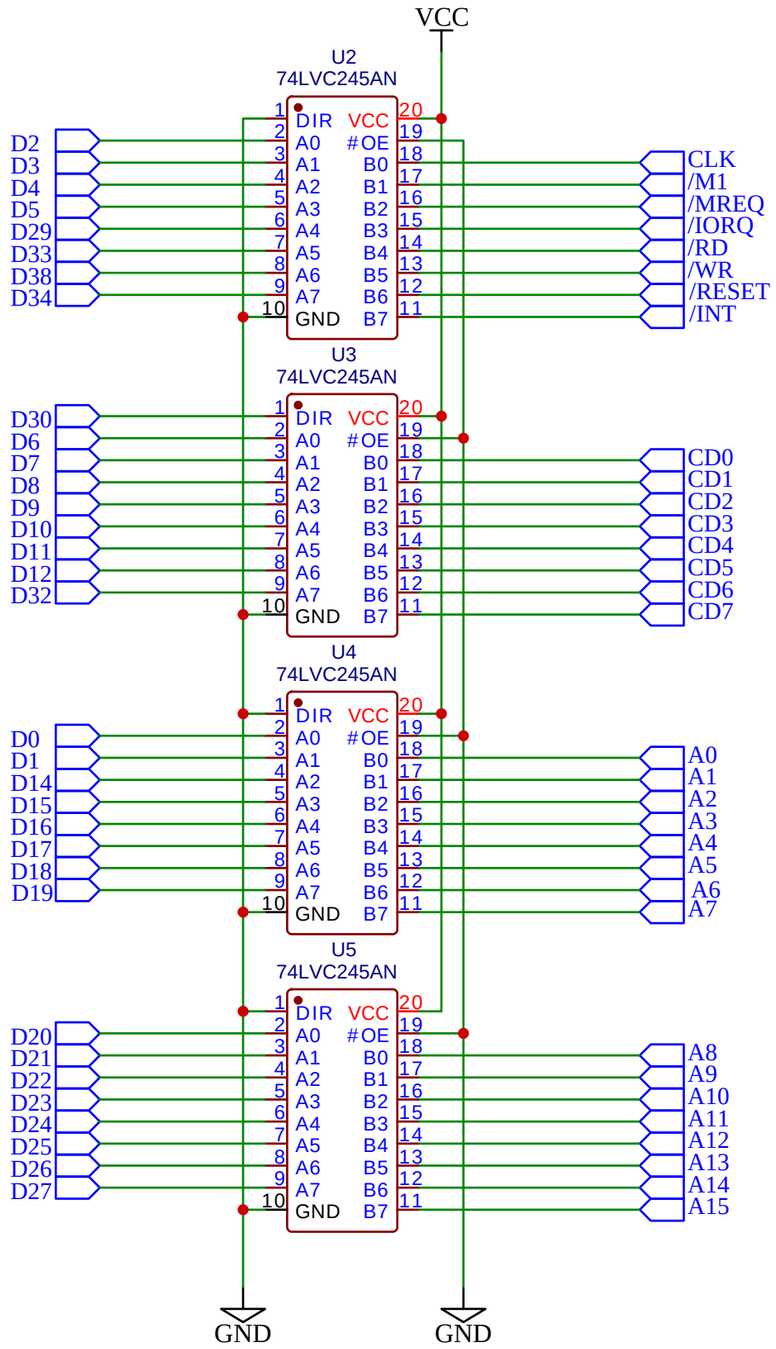

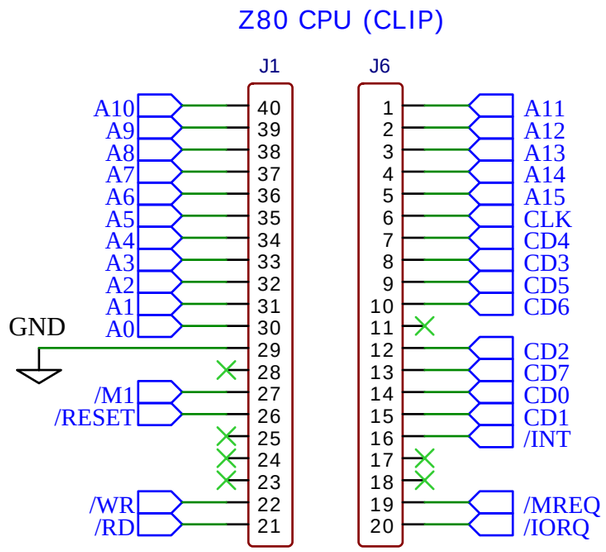

TITLE: Z80 Logic Analyzer		REV: 0.2
EasyEDA	Company: Jeff Tranter	Sheet: 3/3
	Date: 2021-07-08 Drawn By: JJT	