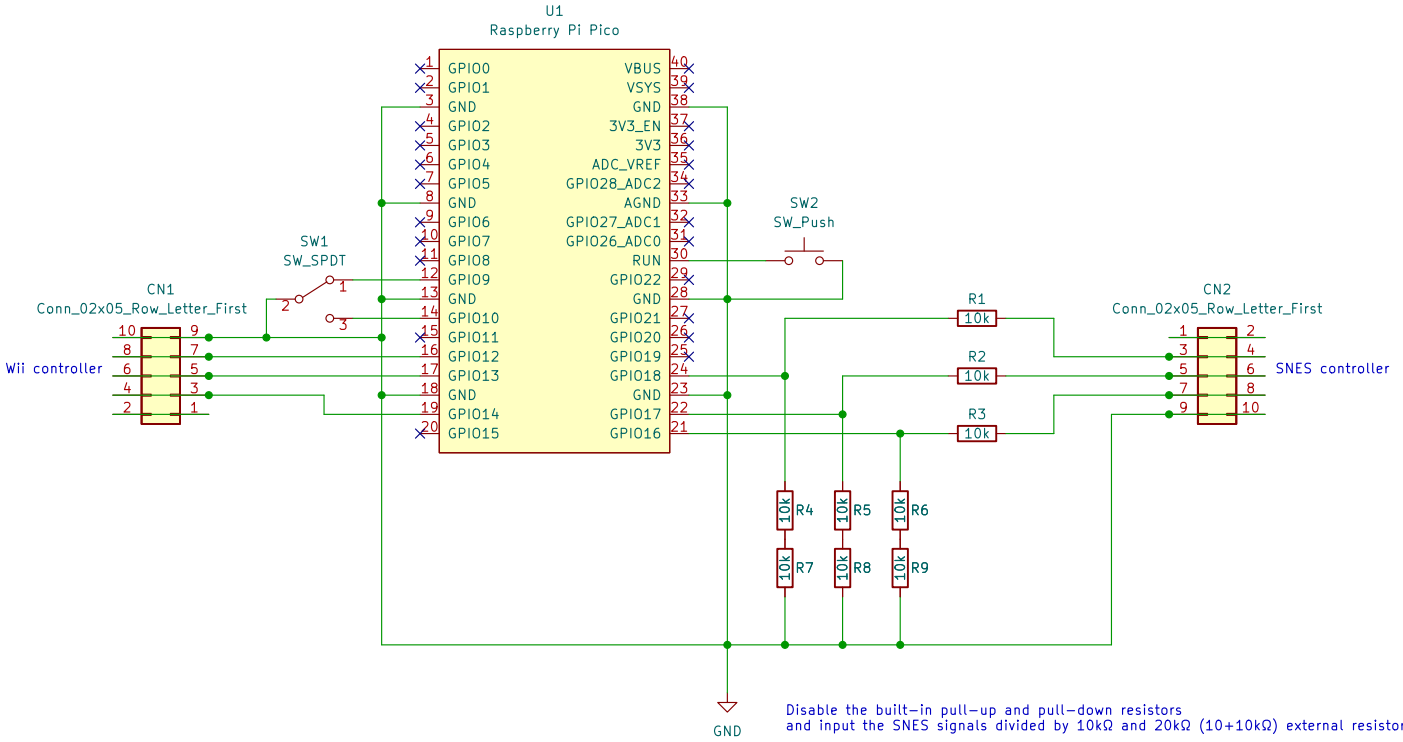

Disable the built-in pull-up and pull-down resistors
and input the SNES signals divided by 10kΩ and 20kΩ (10+10kΩ) external resistors.

If the resistance value used for voltage division is too low,
SNES and RetroSpy will recognize that all buttons are being pressed when no controller is connected.

T.T		
Sheet: /		
File: RetroSpyPico.kicad_sch		
Title: RetroSpy for Raspberry Pi Pico		
Size: A4	Date: 2023-03-07	**Rev: 1**
KiCad E.D.A. kicad (6.0.10)		Id: 1/1