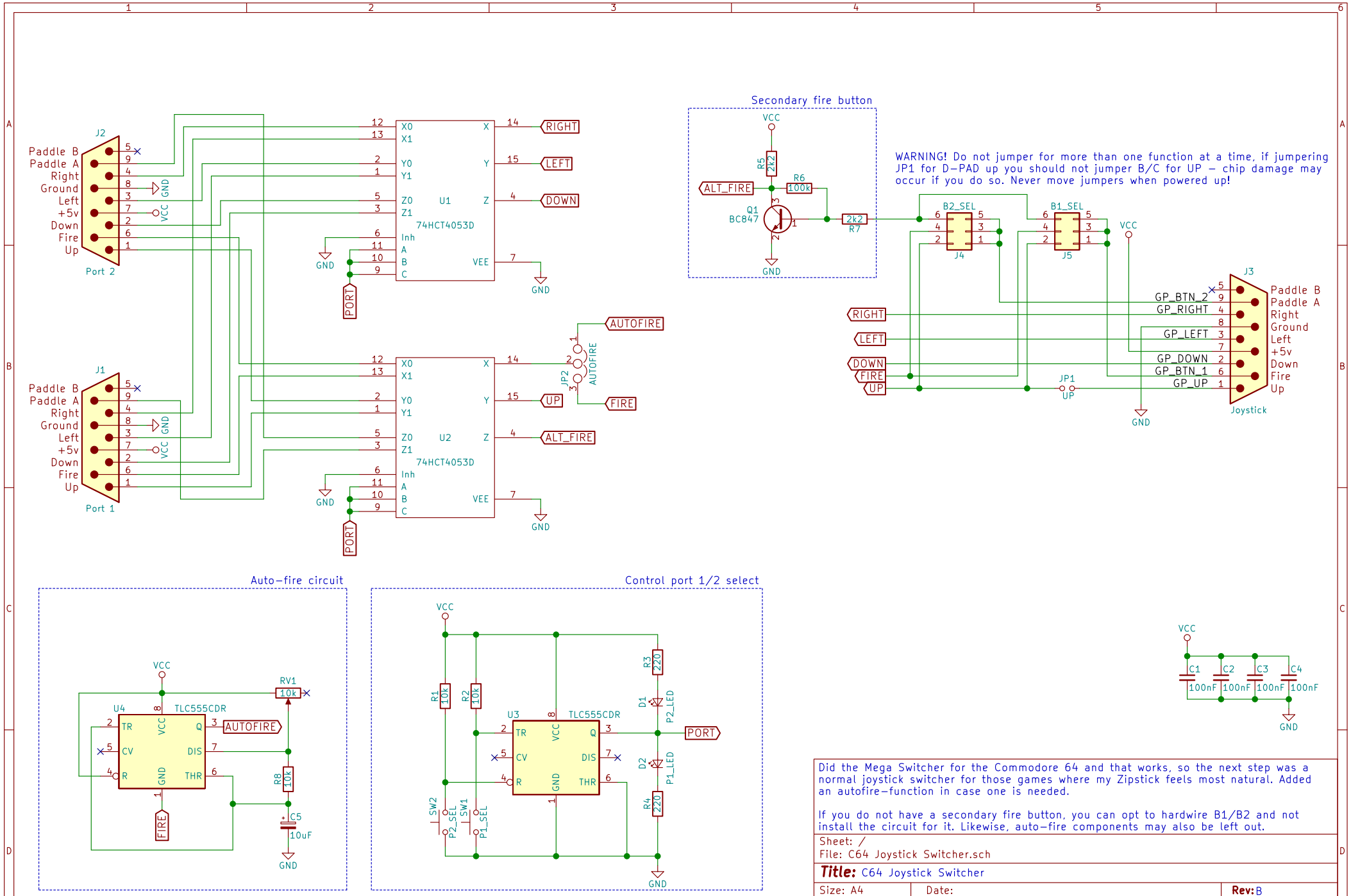


Did the Mega Switcher for the Commodore 64 and that works, so the next step was a normal joystick switcher for those games where my Zipstick feels most natural. Added an autofire-function in case one is needed.

If you do not have a secondary fire button, you can opt to hardwire B1/B2 and not install the circuit for it. Likewise, auto-fire components may also be left out.

Sheet: /
File: C64 Joystick Switcher.sch

**Title:** C64 Joystick Switcher

| Size: A4 | Date: | **Rev:** B |
|---|---|---|
| KiCad E.D.A. kicad 5.1.12-84ad8e8a8692ubuntu20.04.1 | | Id: 1/1 |