Journal of Cleaner Production 426 (2023) 139069

Contents lists available at ScienceDirect

Journal of Cleaner Production

journal homepage: www.elsevier.com/locate/jclepro

Federated learning with SARIMA-based clustering for carbon emission prediction

Tianxu Cui [a], Ying Shi [a,*], Bo Lv [b,**], Rijia Ding [a], Xianqiang Li [c]

[a] School of Management, China University of Mining and Technology (Beijing), Beijing, 100083, China
[b] School of Business, Beijing Wuzi University, Beijing, 101149, China
[c] Machinery Technology Development Co., Ltd., Beijing, 100044, China

ARTICLE INFO

Handling Editor: Giovanni Baiocchi

Keywords:
SARIMA
Federated learning
Carbon emission prediction
Data privacy security

ABSTRACT

Driven by the global Sustainable Development Goals, predicting the long-term trend of carbon emissions in the industrial sector has important reference value for managing national macroeconomic and reducing carbon emissions. To address the potential privacy leakage problem when using multisource industrial big data for carbon emission prediction, a federated learning method was introduced for carbon emission prediction research. However, owing to the variability in individual data providers, using all clients indiscriminately to train the federated model may hinder the computational efficiency of federated learning. To improve the accuracy and computational efficiency of the prediction model, a federated learning method based on SARIMA clustering was proposed. First, a trend was fitted to all clients based on the SARIMA model and the clients were grouped into different clusters based on the fitting results. Second, a federated bidirectional long short-term memory calculation was implemented for different client combinations using a federated averaging algorithm. Extensive experimental results on real datasets show that combining SARIMA and the federated averaging algorithm protects the data privacy of clients and improves the convergence speed and accuracy of the federated learning carbon emission prediction model. Within the optimal set of clusters (Cluster 0), the mean absolute error and mean square error improved by 63.32% and 79.27%, respectively, and the convergence speed of the model improved by 73.17%. This study further enriches the methodological system of carbon emission prediction and provides methodological support for relevant departments to use multisource big data in the industry for carbon emission prediction.

1. Introduction

In recent years, climate change has become an important issue in the international political agenda owing to global warming. Global warming is one of the most challenging and complex issues faced by countries worldwide (IPCC, 2018; Van et al., 2019). It is typically caused by greenhouse gases, mainly carbon dioxide emissions in the atmosphere (Arora et al., 2011). Carbon emission prediction is an important part of the clean energy economy. As China is the world's largest carbon emitter, its carbon reduction actions are essential in mitigating global climate change (Liu et al., 2015). Therefore, the Chinese government has announced aggressive carbon emissions targets to achieve a carbon peak by 2030 (UNFCCC, 2015) and carbon neutrality by 2060 (Zhao et al., 2022), demonstrating to the international community the ambition of the government to address the issue of climate change. China has undoubtedly entered a new development period with the strategic goal of reducing pollution and carbon emissions, in terms of ecological civilization and sustainable economic and social development. Therefore, a deeper understanding of China's past CO2 emission pathways is invaluable to accurately predict its future carbon emissions.

The industrial sector, which is the largest source of carbon emissions, is a key target for carbon reduction. It is foreseeable that, under the hard constraint of the "carbon peak" target, the relevant departments will intensify their carbon reduction policies (NEA, 2017; Grid Stata, 2021), which will lead the industrial sector to accelerate the pace of green and low carbonization, and its carbon emissions will change from increasing to decreasing. However, specific implementation paths and development trends have not been clearly depicted. Therefore, a rational

* Corresponding author.
** Corresponding author.
E-mail addresses: 201563@cumtb.edu.cn (Y. Shi), lvbo732021@163.com (B. Lv).

https://doi.org/10.1016/j.jclepro.2023.139069
Received 26 June 2023; Received in revised form 24 September 2023; Accepted 27 September 2023
Available online 29 September 2023
0959-6526/© 2023 Elsevier Ltd. All rights reserved.

Table 1
Recent research on carbon emission prediction.

Models	References	Methods	Disadvantage	Data security
Econometric models	Appiah (2018) Wang and Lin, 2017 Yang and O'Connell, 2020	Multivariate Granger causality Vector Autoregression (VAR) and STIRPAT Autoregressive Integrated Moving Average (ARIMA)	Requires preconditions assumptions; unable to capture non-linear trends.	No
Artificial intelligence models	AlKheder and Almusalam (2022) Wu et al. (2017) Niu et al. (2020) Sun and Huang, 2022	Support vector machine (SVM), deep learning (DL), and artificial neural network (ANN). Monte Carlo simulation Generalized regression neural network (GRNN) Whale optimization extreme learning machine	Require large-scale data; model over-fitting and easy trapped in local optimal.	No
Grey prediction models	Wang and Zhang (2022) M Gao et al. (2021) R Gao et al. (2021)	Grey prediction model considering spatial correlation Fractional grey Riccati model (FGRM (1, 1)) Joint grey algorithm	Only suitable for short-term and exponential growth prediction	No
Hybrid optimization models	Dai et al. (2018) Huang et al. (2019) Qiao et al. (2020)	GM (1, 1) and least squares SVM (LSSVM) LSTM with grey correlation analysis and principal component analysis (PCA) Lion swarm optimizer and genetic algorithm	No single model in hybrid models can always translate into satisfactory prediction results	No
Our proposed model	–	Federated learning with SARIMA-based clustering	Differences in participant data can lead to free riding issues	**Yes**

understanding and expectation of carbon emission trends can more effectively prevent local governments from "campaign-style carbon reduction" and "pulling the plug on carbon reduction," ensuring that the bottom line of people's livelihood, development, and security is maintained. Based on the scientific prediction of carbon emission trends in industrial sectors, the space size of carbon emission in industrial sectors can be deduced under the target of "carbon peak by 2030," which will help to scientifically formulate corresponding policy measures.

As shown in Table 1, there are currently four main research methods for predicting carbon emissions: econometric (Appiah, 2018), artificial intelligence (AI) (AlKheder and Almusalam, 2022), grey prediction (Wang and Zhang, 2022), and hybrid optimization models (Dai et al., 2018). From a mathematical point of view, most models are obtained from carbon emission time series. Econometric methods are commonly used in economic studies. These methods are mainly based on linear models and recursive predictions that quantitatively analyze the dynamic relationship of the data. Typical methods include Vector Autoregression (VAR) and the Autoregressive Integrated Moving Average model (ARIMA). VAR considers the potential relationships between multiple vectors, whereas ARIMA fully exploits useful information in random perturbation terms other than noise. To obtain an accurate picture of the carbon emissions from the Chinese commercial sector, Wang et al. (2017) combined a VAR model with the STIRPAT model to project emissions for 2030. Yang and O'Connell (2020) used an ARIMA linear model to make a 5-year prediction of CO2 emissions from the air transport industry in Shanghai. However, the construction of econometric models such as ARIMA and STIRPAT generally requires a large number of assumptions and has limitations. Econometric models are not sufficiently accurate in capturing the characteristics of data fluctuations.

AI models are inspired by the structure of human neurons, feature a feedback mechanism and an activation function, and are solved by the search mechanism of gradient descent, which can effectively capture the nonlinear relationships in data. In particular, they have significant advantages when dealing with complex, nonlinear, discontinuous, and high-frequency multidimensional data. Wu et al. (2017) constructed a dynamic model to predict carbon emissions based on a Monte Carlo simulation. Niu et al. (2020) predicted total carbon emissions and their intensity in China for the next 25 years. Their model combined an improved firework algorithm with a generalized regression neural network (GRNN) model. Sun and Huang (2022) used the whale optimization algorithm (WOA)-extreme learning machine (ELM) to predict carbon emission intensity from the perspective of carbon emission efficiency. The WOA was used to optimize the input weights and hidden layer thresholds of the ELM, thus improving the prediction accuracy and robustness of the ELM model. Although AI models have achieved high-quality prediction performance, they are troubled by overfitting and are easily trapped in local optima.

Grey prediction generates a data series with strong regularity by correlation analysis of the raw data, and then builds the corresponding differential equation model to predict future trends. M Gao et al. (2021) proposed a fractional grey Riccati model (FGRM (1, 1)) combining the environmental Kuznets curve assumption and differential information principle to estimate and predict CO2 emissions in the United States, China, and Japan; to improve the accuracy and efficiency of green transportation carbon emission prediction in smart cities, R Gao et al. (2021) proposed a green transportation carbon emission prediction method based on the joint grey algorithm. Although the grey prediction model can generate strong regular-generating sequences from irregular raw data, it is only suitable for short-term and exponential growth predictions.

In addition, based on the above three models, certain combined models have been applied for carbon emission prediction. Dai et al. (2018) proposed a CO2 emission prediction model based on GM (1, 1) and least squares support vector machine (LSSVM), which was optimized by an improved shuffle frog jumping algorithm. Huang et al. (2019) combined long short-term memory network (LSTM) with grey correlation analysis and principal component analysis (PCA) to predict carbon emissions in China. Qiao et al. (2020) combined a lion swarm optimizer and a genetic algorithm to predict carbon emissions for each country from 2018 to 2025. The aforementioned studies showed that combined models outperformed individual models in terms of carbon emission prediction accuracy. However, in practical situations, different datasets have significantly different data features; thus, no single model in hybrid models can always translate into satisfactory prediction results.

Although econometric models are easy to use, sufficient historical data must be collected before they can be trained. Similarly, AI models perform well in predicting and overcoming noisy data; however, they require large amounts of data to build a sample database. Fortunately, modern information and communication technologies have enabled the accumulation of large amounts of carbon emission data across a wide range of industries. However, massive amounts of data are stored in a distributed manner at the edge nodes of each organization. Due to privacy protection regulations and commercial confidentiality

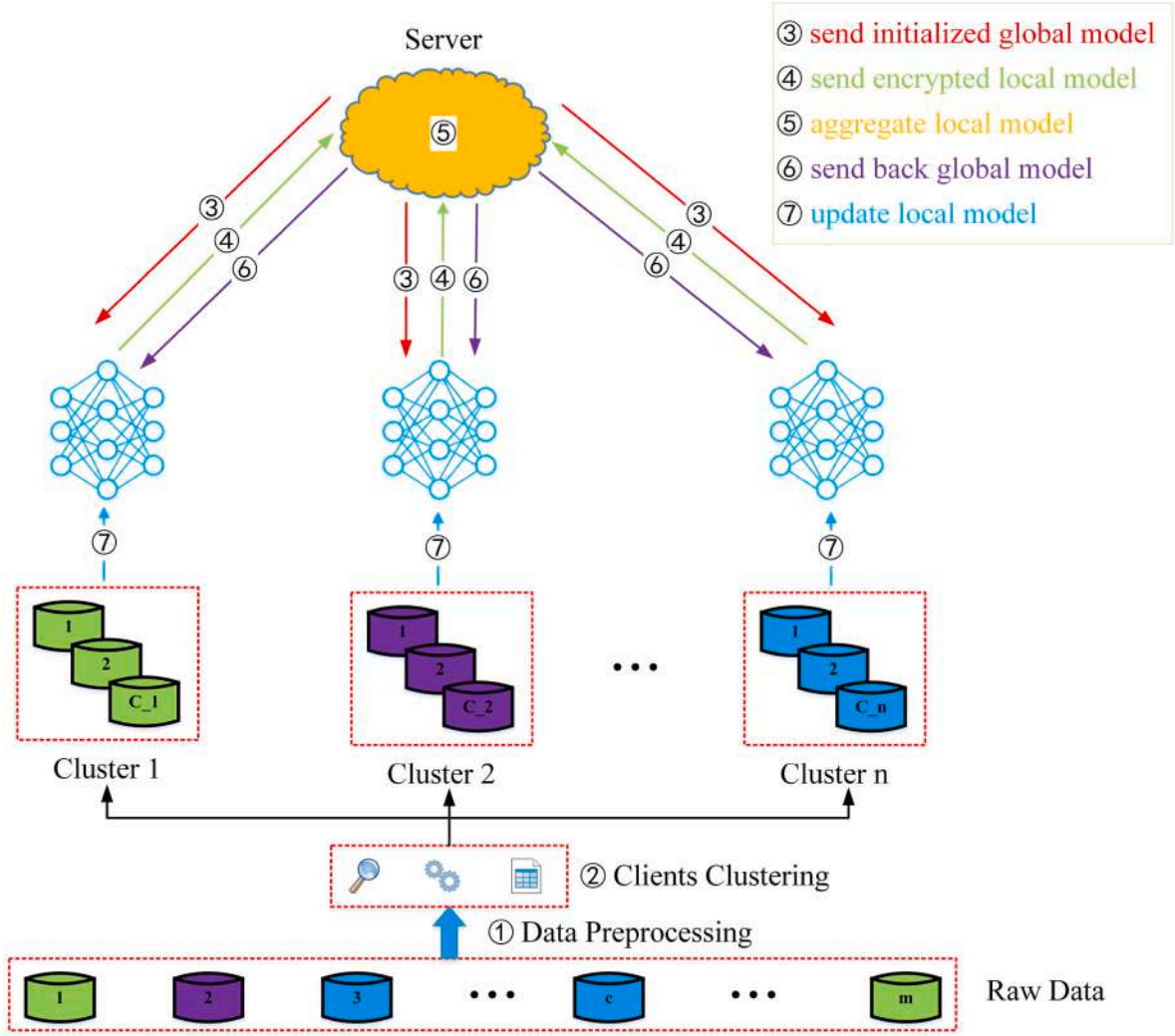

Fig. 1. System workflow.

requirements, private data are not directly shared with other industry players in data mining and model building. For example, the General Data Protection Regulation, officially implemented in the EU in May 2018, imposed strict requirements on data security. It is currently the most comprehensive and widely used privacy protection law worldwide.

To address the potential privacy leakage problem when using multisource big data for carbon emission prediction, a federated learning method was introduced. Federated learning is a machine-learning setting (Kairouz et al., 2021) that enables multiple participants to share data and train models while satisfying privacy protection, data security, and laws and regulations. Federated learning has been widely used in several fields such as healthcare (Chen et al., 2020; Hakak et al., 2020; Yu et al., 2021), smart homes (Aïvodji et al., 2019; Yu et al., 2020), and industrial engineering (Saputra et al., 2019; Zhao et al., 2020) due to its privacy and high usability. Federated learning has recently been applied to prediction studies in various fields. Numerous studies have emerged in the fields of stock market trend analysis (Pourroostaei Ardakani et al., 2023), production line failure prediction (Ge et al., 2022), traffic flow prediction (Liu et al., 2020, 2023), supply chain risk prediction (Zheng et al., 2023), and building energy consumption prediction (Tun et al., 2021; Gholizadeh and Musilek, 2022; Zhang et al., 2022). However, no research applying federated learning to carbon emission prediction has been conducted.

In this study, we introduce federated learning to predict CO2 emissions from the industrial sector. However, because of the variability among individual data providers, using all clients indiscriminately to train the model may hinder the computational efficiency of federated learning. To improve the accuracy and computational efficiency of prediction model, we propose a federated learning method based on seasonal ARIMA (SARIMA) clustering. Unlike previous studies (Tun et al., 2021; Gholizadeh and Musilek, 2022), our proposed SARIMA clustering model does not require additional attribute data from the client (such as GDP, population size, and geographic location). Instead, only raw data from federated learning is needed to effectively extract seasonal trends in the time series and perform preliminary clustering. Our contributions can be summarized as follows:

- We propose a potential privacy leakage problem when using multisource data for carbon emission prediction. We propose the use of federated learning to address this problem.
- To improve the computational efficiency of federated learning, we first use a SARIMA-based method to cluster the clients participating in federated learning and then perform federated bidirectional LSTM (BiLSTM) calculations using a federated averaging algorithm.
- We conducted experimental validation using industry sector (electricity) time-series data from January 1, 2019, to August 31, 2022, for 13 countries. The results show that our proposed SARIMA-federated BiLSTM (Fed-BiLSTM) can improve the accuracy and efficiency of carbon emission prediction without requiring raw data from the local area.

The remainder of the paper is organized as follows: in Section 2, the systematic workflow of our proposed method is shown; in Section 3, the proposed method is described in detail; in Section 4, the experimental setup and analysis of the results are presented. Finally, our study is summarized and future research ideas are elaborated in Section 5. To the best of our knowledge, this study is the first to apply federated learning to carbon emission prediction scenarios. Accuracy of the prediction model as well as potential privacy data leakage during the model training process are considered. From the perspective of sustainable development, we propose a novel carbon emission prediction method to ensure the efficiency of the model and reliability of the results, which provides a data reference and scientific basis for the government to formulate a low-carbon policy for related industries.

2. System workflow

The workflow of the proposed SARIMA-Fed-BiLSTM carbon emission prediction model is illustrated in Fig. 1. In a federated carbon emission prediction system, it is assumed that there are m clients (participants) with similar data characteristics who federated and train a prediction model using a central server. Each client c has a dataset D_c with $c \in m = \{1, 2, \cdots, m\}$. We assume that all clients are trusted, and the server is trusted but curious. Therefore, no client can leak information to the server. A typical federated learning carbon emission prediction system workflow comprises seven steps.

Step 1 For every client c with $\mathrm{c} \in \mathrm{m} = \{1, 2, \cdots, \mathrm{m}\}$, they first perform data preprocessing for missing values, outliers, and duplicates according to the type of federated learning task published by the server. In addition, data normalization is performed to eliminate the impact of different dimensions on the results. Finally, they must perform feature boxing, sample alignment, data slicing, and other operations on class-imbalanced data.

Step 2 For every client c with $c \in m = \{1, 2, \cdots, m\}$, the SARIMA model is fitted locally using the local dataset D_c to obtain the respective model parameter combinations and the parameter combination results are uploaded to the central server. The server clusters m clients into n clusters, based on the received parameters.

Step 3 For each cluster k, the server sends an initialized global model M^r to each client c in k, $c \in C = \{1, 2, \cdots, C\}$, where r is the iteration round.

Step 4 Client c trains the local model M_c^r using the local dataset D_c, encrypts the model using cryptographic methods such as homomorphic encryption and differential privacy (this is not the focus of this study and will not be elaborated. Readers who are interested should refer to the relevant literature, such as Yang et al., 2019; Zhao et al., 2020), and then sends the encrypted result M_c^r to the server.

Step 5 The server securely aggregates encrypted model M_c^r from client c to obtain a new global model M^{r+1} without any raw client data.

Step 6 The server sends the aggregated model to client c according to the predefined rules.

Step 7 Client c updates their respective local models using the decrypted gradients.

The entire training process is completed by iterating steps 3–7 until the loss function converges or reaches the required number of iteration rounds set in advance. The system workflow is independent of specific machine-learning algorithms (decision tree, LSTM, DNN), and all clients within the cluster share the final model parameters. Model aggregation in step 4 proceeds as follows: First, the server calculates the gradient for each client c.

$$\Delta_c^r = M_c^r - M^r \tag{1}$$

Then, the server gets the weighted average of all client gradients

$$\Delta^r = \sum_{c=1}^{C} \frac{|D_c|}{\sum_{c=1}^{C} |D_c|} \bullet \Delta_c^r \tag{2}$$

where $|D_c|$ is the size of the training data D_c. Finally, the server calculates a new global model based on the gradient descent equation.

$$M^{r+1} = M^r + \Delta^r \tag{3}$$

The entire training process is secure and trustworthy because the local data are neither uploaded to the server nor reach any client during the entire federated learning process, and the gradients generated by the local training are sent using the necessary cryptographic encryption techniques.

3. Material and methods

3.1. SARIMA clustering model

The ARIMA model is widely used for time-series analysis and prediction and has advantages for dealing with linear time series (Hillmer and Tiao, 1982). Nonstationary time series are transformed into stationary time series after differencing using this method, and the model performs regression analysis on the lagged values of the dependent variable and its random errors. This method combines two models: Autoregressive and Moving Average models. A typical *ARIMA* (p, d, q) model can be represented by the backshift operator B as follows:

$$\varphi(B)(1 - B)^d y_t = \theta(B)\varepsilon_t \tag{4}$$

where $\varphi(B) = 1 - \sum_{t=1}^{p} \varphi_t B^t$, $\theta(B) = 1 + \sum_{t=1}^{q} \theta_t B^t$. B is the backshift operator; p is the autoregressive lag order; d is the number of differences that transform the non-stationary series into a stationary series; q is the moving average order; ε_t is the deviation at time t; φ_t is the coefficient of the autoregressive part; θ_t is the moving average coefficients of the part.

To further extract the seasonal trend of the time series, the multiplicative seasonal model *SARIMA* $(p, d, q) \times (P, D, Q, s)$ was used for trend fitting, which is calculated as follows:

$$\varphi_p(B)\widetilde{\varphi}_P(B^s)(1 - B)^d y_t = \theta_q(B)\widetilde{\theta}_Q(B^s)\varepsilon_t \tag{5}$$

where $\varphi_p(B)$ denotes the non-seasonal autoregressive lag polynomial; $\widetilde{\varphi}_P(B^s)$ denotes the seasonal autoregressive lag polynomial; $\theta_q(B)$ denotes the non-seasonal moving average lag polynomial; and $\widetilde{\theta}_Q(B^s)$ denotes the seasonal moving average lag polynomial.

The specific steps for clustering the carbon emission trends using the SARIMA model are as follows:

(1) Stationary test. Identify whether the data are stationary based on a scatter plot of carbon emissions and augmented Dickey–Fuller test results. If it is nonstationary, the nonstationary series should be smoothed.
(2) Sequence model identification. The grid search optimization algorithm combined with the Akaike information criterion (AIC) was used to select the set of parameter combinations with the minimum AIC values and determine the values of p, q, d and P, D, Q, s.
(3) Residual test. Verify whether the fitted carbon emission residuals are white noise and follow a Gaussian distribution. If the residuals are random series, it means that the residuals are white noise and obey Gaussian distribution, which can be used for carbon emission prediction research.
(4) SARIMA models that passed the residual test and had the same combination of parameter values were grouped into a cluster.

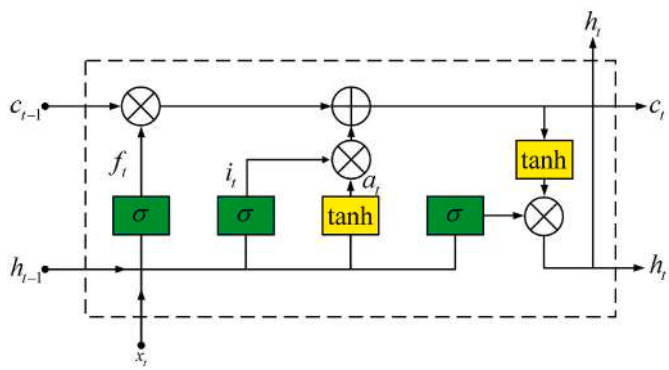

Fig. 2. LSTM network structure.

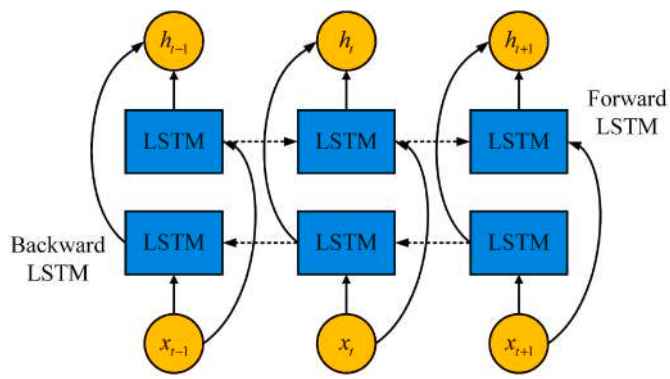

Fig. 3. BiLSTM network structure.

3.2. Fed-BiLSTM model

To fully exploit the nonlinear relationships in the carbon emission time series data and improve the accuracy of carbon emission predictions, a carbon emission prediction method based on Fed-BiLSTM was proposed. First, to enhance the efficiency of the neural network, a sliding time window was used to construct the input data such that the carbon emission values at the previous time points could be input to predict the carbon emission values at the next time point. Second, a multi-layer BiLSTM network was constructed to predict the carbon emission data with time window characteristics; finally, the Federated Average (FedAvg) algorithm (Konečný et al., 2016) was applied to the Bi-LSTM network for distributed machine-learning modeling.

3.2.1. LSTM network

An LSTM network is a type of recurrent neural network (RNN) (Yu et al., 2019). As shown in Fig. 2, LSTM is similar to the RNN in the main structure, and its main improvement is the addition of three gate structures (forget gate, input gate, and output gate) in the hidden layer h and a new hidden state (cell state). $f(t)$, $i(t)$, and $o(t)$ denote the forget, input, and output gate values at time t, respectively, and $a(t)$ denotes the initial feature extraction of $h(t–1)$ and $x(t)$ at time t.

The specific calculation process is

$$f(t) = \sigma\left(W_f h_{t-1} + U_f x_t + b_f\right) \tag{6}$$

$$i(t) = \sigma(W_i h_{t-1} + U_i x_t + b_i) \tag{7}$$

$$a(t) = tanh(W_a h_{t-1} + U_a x_t + b_a) \tag{8}$$

$$o(t) = \sigma(W_o h_{t-1} + U_o x_t + b_o) \tag{9}$$

where x_t denotes the input at time t; h_{t-1} denotes the hidden layer state value at time t-1; W_f, W_i, W_o, and W_a denote the weight coefficients of h_{t-1} in the forget gate, input gate, output gate and feature extraction process, respectively; U_f, U_i, U_o, and U_a denote the forget gate, input gate, output gate, and feature extraction process, respectively, and the weight coefficients of x_t in the feature extraction process; b_f, b_i, b_o, and b_a denote the bias values in the forget gate, input gate, output gate, and feature extraction process, respectively; tanh denotes the tangent hyperbolic function; and σ denotes the sigmoid activation function.

The results of the forget and input gate calculations act on $c(t-1)$ and constitute the cell state $c(t)$ at time t, which is expressed by

$$c(t) = c(t-1) \odot f(t) + i(t) \odot a(t) \tag{10}$$

where $\odot$ is the Hadamard product. Finally, the hidden layer state value $h(t)$ at time t is derived from the output gate $o(t)$ and the cell state $c(t)$ at the current time as follows:

$$h(t) = o(t) \odot \tanh\left(c(t)\right) \tag{11}$$

3.2.2. Bidirectional long short-term memory network

BiLSTM neural networks comprise forward and backward LSTM, and this special structure enables the feature data obtained from the hidden layer to contain both past and future information (Siami-Namini et al., 2019). As shown in Fig. 3, compared with LSTM, BiLSTM can capture the dependency information of the input data in two directions, which effectively improves the feature representation of the input data by the prediction model; therefore, BiLSTM was selected as the basic model for carbon emission time-series data prediction in this study.

As shown in Fig. 3, the calculation process of the forward LSTM structure in the BiLSTM network is similar to that of a single LSTM, and the forward and backward hidden layer states are combined to obtain the hidden layer state of the BiLSTM network, which is calculated as:

$$\overrightarrow{h}_t = LSTM(h_{t-1}, x_t) \tag{12}$$

$$\overleftarrow{h}_t = LSTM(h_{t+1}, x_t) \tag{13}$$

$$h_t = \alpha \overrightarrow{h}_t + \beta \overleftarrow{h}_t \tag{14}$$

Where x_t, $\overrightarrow{h}_t$, and $\overleftarrow{h}_t$ denote the input data, the output of the forward LSTM hidden layer, and the output of the backward LSTM hidden layer at time t, respectively; α and β are constant coefficients and denote the weights of $\overrightarrow{h}_t$ and $\overleftarrow{h}_t$, respectively.

3.3. Federated learning algorithm based on SARIMA clustering

The FedAvg algorithm was used to update the global model based on a local model. Without loss of generality, in a typical federated learning carbon emission prediction system, it is assumed that there are C clients participating in the carbon emission prediction model training, the total sample set of all clients participating in the federation is D, the sample size is $|D|$, the dataset owned by the cth client is D_c, and the sample size is $|D_c|$. The objective function to be optimized is $\min_{w \in R^d} f(w)$:

$$f(w) = \sum_{c=1}^{C} \frac{|D_c|}{|D|} F_c(w), F_c(w) = \frac{1}{|D_c|} \sum_{i=1}^{|D_c|} f_i(w) \tag{15}$$

where $f_i(w) = \mathrm{Loss}(x_i, y_i; \mathrm{w})$ is the loss result obtained from the prediction of the model parameter w for the sample (x_i, y_i), and x_i and y_i denote the ith data point and its label for the cth client, respectively. Then, let the gradient of the rth round of the cth client be $g_c = \nabla F_c(w_t)$ and the learning rate be η. The parameters obtained from the $(r+1)th$ global update are

$$w^{r+1} \leftarrow w^r - \eta \sum_{c=1}^{C} \frac{|D_c|}{|D|} g_c \tag{16}$$

Table 2
Descriptive statistics of raw data.

ID	National	Count	Mean	Std	Min	Max
1	Brazil	1339	224.7885	114.4554	41.0940	493.6960
2	China	1339	13197.9718	1979.7673	7172.1790	18915.9410
3	EU27_UK	1338	2424.3276	577.1357	1136.8810	4262.9090
4	France	1339	79.7783	45.5347	11.1570	205.8520
5	Germany	1338	638.5174	213.0068	221.6960	1223.9550
6	India	1338	3406.9931	428.1159	2293.8380	4444.1840
7	Italy	1338	252.9314	66.8592	93.5150	434.3280
8	Japan	1338	1409.5326	270.4496	720.5230	2235.3340
9	ROW	1339	9806.9946	752.8505	7365.1690	11664.0190
10	Russia	1339	2792.9998	658.2219	1483.3260	4537.0310
11	Spain	1339	128.1948	44.8363	43.6400	272.6630
12	UK	1339	193.2152	69.4136	51.2400	475.8970
13	US	1338	4163.0726	845.5240	2467.7879	6231.9804

The local update for each client c is

$$w_c^{r+1} \leftarrow w_c^r - \eta \nabla F_c(w^c) \tag{17}$$

Then, by combining the SARIMA-based clustering method proposed in Section 3.1, and the BiLSTM-based prediction model proposed in Section 3.2.2, the algorithm of the SARIMA-Fed-BiLSTM-based carbon emission prediction model was obtained. Algorithm 1 presents the details of the proposed method. Specifically, in lines 3–6, each client participating in the federation fits the SARIMA model using local time-series data and sends the parameters to the central server; in line 7, the server aggregates the participants into different clusters based on the received parameters; in lines 8–11, the initialization of the model parameters is performed; finally, in lines 12–20, each client in each cluster and the execution of the Federated averaging algorithm are performed. In line 15, each client performs the model training and parameter update of the BiLSTM network using the local time-series data; in line 16, the updated parameters are sent to the central server, whereas in line 18, the central server aggregates the model parameters from each client using the FedAvg algorithm and updates the global model.

Algorithm 1. Federated learning with SARIMA-based Clustering

1: **Input:** Time series data D_c from each of m clients.
2: **Output:** cluster specific models with trained weights: $w_k,\ k = 1,2,\ldots,N$
3: **for** each client c with $c = 1,2,\ldots,m$ **do**
4: Fit SARIMA model parameters using local datasets D_c.
5: Send model parameters to the central server.
6: **end for**
7: Based on SARIMA parameters, server groups clients into n clusters.
8: Server randomly initializes a base model w_0.
9: **for** each cluster k with $k = 1,2,\ldots,N$, **in parallel do**
10: Initialize cluster specific model weights, $w_k \leftarrow w_0$
11: **end for**
12: **for** each cluster k with $k = 1,2,\ldots,N$, **in parallel do**
13: **for** communication round $r = 1,2,\ldots,R$ **do**
14: **for** each client c in cluster k, $c = 1,2,\ldots,C$ **in parallel do**
15: Train and update the local model w_k^c using local data D_c
16: Send updated weights w_k^c back to the central server
17: **end for**
18: Aggregate weights and update global model using FedAvg method in Eq.16.
19: **end for**
20: **end for**

4. Experimental setup and analysis of results

To evaluate the performance of the proposed SARIMA-Fed-BiLSTM, the multilayer perceptrons (MLP) and LSTM were used as comparative experimental models. Our models were set to receive 30 days of carbon emissions time-series data and predict the next day's carbon emissions. The experiments were run on a desktop computer with 32G main memory, an AMD Ryzen 7 5800 @ 3.40 GHz CPU, 8 cores, 16 threads, and an Nvidia GeForce RTX3060 12 GB graphics card. The programming language was Python and the federated learning framework used was TensorFlow Federated. The necessary packages and libraries were numpy, pandas, matplotlib, statsmodels, keras, sklearn, tensorflow, and tensorflow_federated.

Table 3
The range of hyperparameter values for grid search.

Type	num_epochs	batch_size	dropout rate	learning_rate
local model	1, **5**, 10	32, 64, 128, **256**, 512	0.01, **0.1**	**0.001**, 0.01, 0.1
global model	–	32, 64, 128, **256**, 512	0.01, **0.1**	**0.001**, 0.01, 0.1

Table 4
The network structure of each prediction model.

Model	Network architecture	activation function	loss function
MLP	The mlp_layers to [32, 64, 128, 256, 256, 128, 64, 32]	'relu', 'sigmoid'	Huber()
LSTM	The lstm_layers to [256, 256, 128,128]	'tanh'	
BiLSTM	The lstm_layers to [256, 128]; the dense_layers to [64, 32]	'tanh'	

Table 5
When batch_size = 32, dropout = 0.01and learning_rate = 0.01, the performance of each prediction model under different iteration rounds.

Local iteration round	MLP	LSTM	BiLSTM
1	0.0213	0.0213	0.0329
5	0.0215	0.0213	0.0328
10	0.0215	0.0215	0.0331

Table 6
When local iteration round = 5, dropout = 0.01and learning_rate = 0.01, the performance of each prediction model under different batch_size.

Batch_size	MLP	LSTM	BiLSTM
32	0.0215	0.0213	0.0344
64	0.0083	0.0214	0.0347
128	0.0085	0.0217	0.0365
256	0.0084	0.0229	0.0526
512	0.0089	0.0213	0.0548

Table 7
When local iteration round = 5, batch_size = 256 and learning_rate = 0.01, the performance of each prediction model under different dropout rate.

Dropout rate	MLP	LSTM	BiLSTM
0.01	0.0084	0.0229	0.0526
0.1	0.0102	0.0213	0.0515

Table 8
When local iteration round = 5,batch_size = 256 and dropout = 0.1, the performance of each prediction model under different learning_rate.

Learning_rate	MLP	LSTM	BiLSTM
0.001	**0.0081**	**0.0035**	**0.0018**
0.01	0.0099	0.0213	0.0515
0.1	0.0111	0.0216	3.9452

Table 9
SARIMA model fitting results.

ID	National	SARIMA	minAIC	Cluster
1	Brazil	(1,1,1)X(1,1,1,12)	12075.5704	0
2	China	(1,1,1)X(1,1,1,12)	19858.5484	0
3	EU27_UK	(1,0,1)X(1,1,1,12)	19082.2214	1
4	France	(1,1,1)X(0,0,1,12)	11868.3614	−1
5	Germany	(1,0,1)X(1,1,1,12)	16525.2972	1
6	India	(1,0,1)X(1,1,1,12)	16256.4700	1
7	Italy	(1,0,1)X(1,1,1,12)	13556.9368	1
8	Japan	(1,1,1)X(1,1,1,12)	16349.9357	0
9	ROW	(1,0,1)X(1,1,1,12)	19269.5549	1
10	Russia	(1,1,1)X(1,1,1,12)	15281.7757	0
11	Spain	(1,0,1)X(0,1,1,12)	12118.4467	−1
12	UK	(1,0,1)X(1,1,1,12)	13936.7146	1
13	US	(1,0,1)X(1,1,1,12)	18632.0474	1

4.1. Dataset

This study conducted an empirical study using the global time-series dataset of carbon emissions by industry sector from 2019 to 01-01 to 2022-08-31, published by the China Carbon Accounting Database (https://carbonmonitor.org.cn/downloads/) (Z Liu et al., 2020). This dataset includes carbon emission data for different industries in 13 major countries and regions worldwide. To simulate a federated learning scenario, we assume that the datasets from each of the 13 countries are stored within local clients and cannot be shared directly due to privacy regulations. Notably, due to space limitations, this study only considers carbon emission data of the electricity sector as an example to conduct the study, and other sectors are studied in a similar way. As shown in Table 2, the scale of carbon emissions varies significantly from country to country. Therefore, the data were normalized. Data from 2019 to 01-01 to 2022-04-30 were selected as the training dataset and data from 2022 to 05-01 to 2022-08-31 were selected as the test dataset.

4.2. Evaluation metrics

To evaluate the prediction accuracy of our proposed carbon emission prediction algorithm, the mean absolute error (MAE) and mean square error (MSE) metrics were used to evaluate the algorithm performance. MAE denotes the mean of the absolute error between the true and predicted values and MSE denotes the mean of the squared distance between the true and predicted values. These are classical evaluation methods for regression prediction tasks and can compare the accuracy of different prediction models, with smaller MAE and MSE values implying better predictions. The calculation formula is as follows:

$$\mathrm{MAE}(y,f)=\frac{1}{|D_c|_{test}}\sum_{i=1}^{|D_c|_{test}}|y_i-f_i| \tag{18}$$

$$\mathrm{MSE}(y,f)=\frac{1}{|D_c|_{test}}\sum_{i=1}^{|D_c|_{test}}(y_i-f_i)^2 \tag{19}$$

where y_i denotes the true value, f_i denotes the predicted value, and $|D_{c_test}|$ is the size of the test data set for the *cth* client.

Table 10
Summary of clustering results.

Cluster	−1	0	1	2
Client	[4,11]	[1,2,8,10]	[3,5,6,7,9,12,13]	[1,2,3,5,6,7,8,9,10,12,13]

4.3. Experimental parameter setting and prediction model selection

We assumed that the carbon emissions time-series data for each country were stored on a client and encrypted with a trusted central server over a TCP/IP network. The clients of each cluster train the prediction models in parallel using a federated learning paradigm. At the beginning of each training round, the latest global model was synchronized with the participating clients as the local model. In each training round of the global model, each client performed a certain number of the local model. At the end of each training round, the global models generated were evaluated using the test data of their respective clusters.

In the SARIMA clustering phase of each client, the SARIMAX() function in the statsmodels module was used to implement SARIMA model fitting. Specifically, the model parameters p, q, d and P, D, Q were set to take values in the range [0,2); s was 12. The optimal combination of parameters was systematically selected according to the minimum AIC using a grid search (hyperparameter optimization) method.

During the training phase of federated learning model for each cluster, the Keras and TensorFlow APIs were used to implement the prediction model and the TensorFlow-Federated API was used to implement the federated averaging algorithm. We set the time window_size to 30 and the prediction step ahead to 1. Similarly, we use grid search methods to optimize the hyperparameters and network structure for local and global models. Table 3 lists the range of hyperparameters values. The network structure of each prediction model is shown in Table 4. In addition, for ease of comparison, we set activation function to tanh; optimizer to Adam; and loss function to Huber() for the global model.

In this section, we use cluster 0 ([1, 2, 8, 10])as an example for hyperparameter optimization. The criterion for selecting the optimal parameters is the loss function value of the model when the global model reaches convergence. After extensive experiments, we have obtained the optimal hyperparameter combination(Due to space limitations, we have only presented some key experimental results in Tables 5–8.). Therefore, we set the iteration rounds num_epochs of the local model to 5; the batch_size to 256; the random dropout rate dropout to 0.1; learning_rate to 0.001.

In addition, as shown in Table 8, under the same optimal hyperparameter combination settings, the convergence performance of the BiLSTM model is better than that of both MLP and LSTM. This also fully

Table 11
Summary of training results.

Cluster	0	1	2
Client	[1,2,8,10]	[3,5,6,7,9,12,13]	[1,2,3,5,6,7,8,9,10,12,13]
Number of clients selected per round (C)	4	4	4
Training rounds(r)	40	60	150
Training time(s)	**1720**	2583	6412
Training global loss (Huber)	**0.0018**	0.0039	0.0039

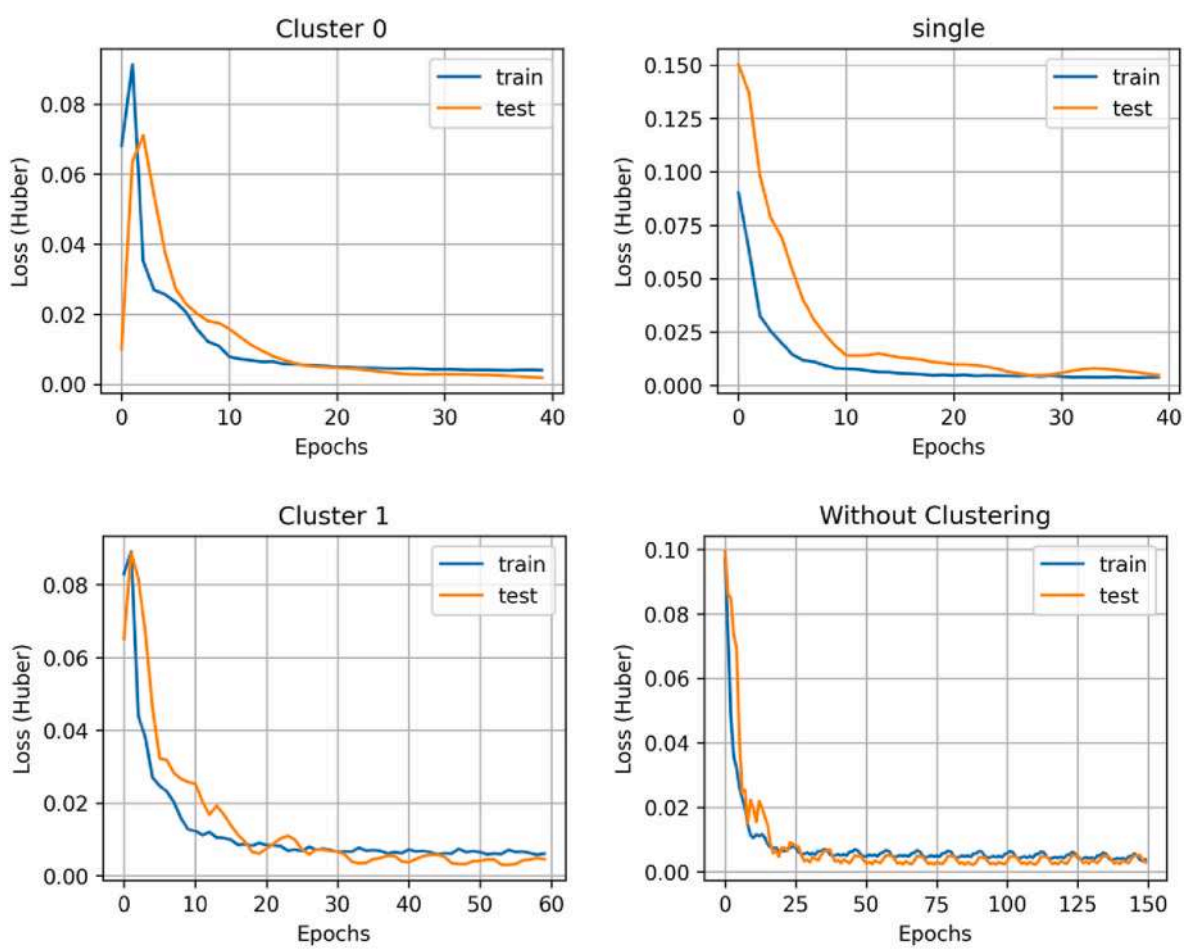

Fig. 4. Training loss function for various scenarios.

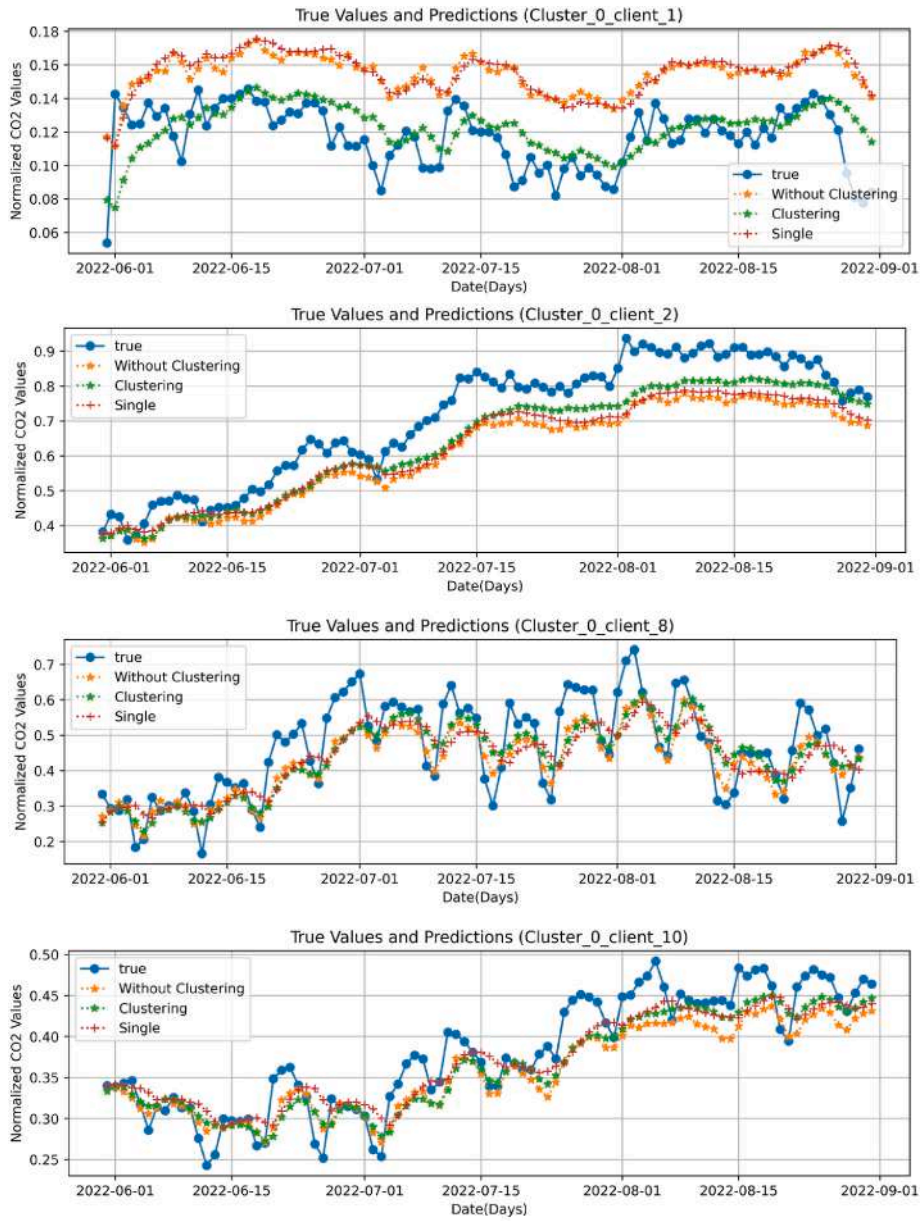

Fig. 5. Prediction effect of Cluster 0's 1, 2, 8, 10 client on the test set.

proves that compared to LSTM, BiLSTM can capture the dependency information of input data in two directions, which effectively improves the feature representation of the input data by the prediction model; Therefore, in subsequent experiments, BiLSTM was selected as the basic model for carbon emission time-series data prediction in this study.

4.4. Experimental results analysis

Table 9 lists the optimal combination of parameters for the SARIMA model fit for each client and their corresponding minimum AIC values. Thus, the 13 clients were clustered into 3 different cluster types, −1, 0 and 1. Among them, −1 denotes the unselected isolated clients (they were not clustered successfully); cluster 0 includes 1, 2, 8, and 10; and cluster 1 includes 3, 5, 6, 7, 9, 12, and 13. In addition, for comparison, federated learning without clustering of all 11 selected clients (cluster ID is 2) was performed; each client was trained as a single prediction model. Table 10 summarizes the clustering results.

Fig. 4 shows the convergence of the model loss function (Huber) for various scenarios. The comparison shows that the clustered federated model (clusters 0 and 1) take only 40–60 rounds to converge; however, the federated model without clustering (cluster 2) does not fully converge after 150 rounds, provided that the clients are selected equally in each round. Table 5 summarizes the training results for various scenarios.

Table 11 shows that the accuracy of the clustered federated model did not decrease compared with the federated model without clustering; however, the number of training rounds and training time decreased significantly, and the convergence speed of clusters 0 and 1 increased by 73.17% and 59.72%, respectively. This indicates that the proposed SARIMA-based clustering method significantly improves the convergence speed of federated learning. In addition, comparing clusters 0 and 1, we found that cluster 0 converged to 0.0018 after 40 rounds of training, whereas cluster 1 only converged to 0.0039 after 60 rounds of training. This indicates that, to a certain extent, the fewer clients included in the clusters, the faster the model converges and the better the convergence effect.

Figs. 5–7 show the prediction effects of the 11 clients involved in clustering on their own test sets, including three different scenarios:

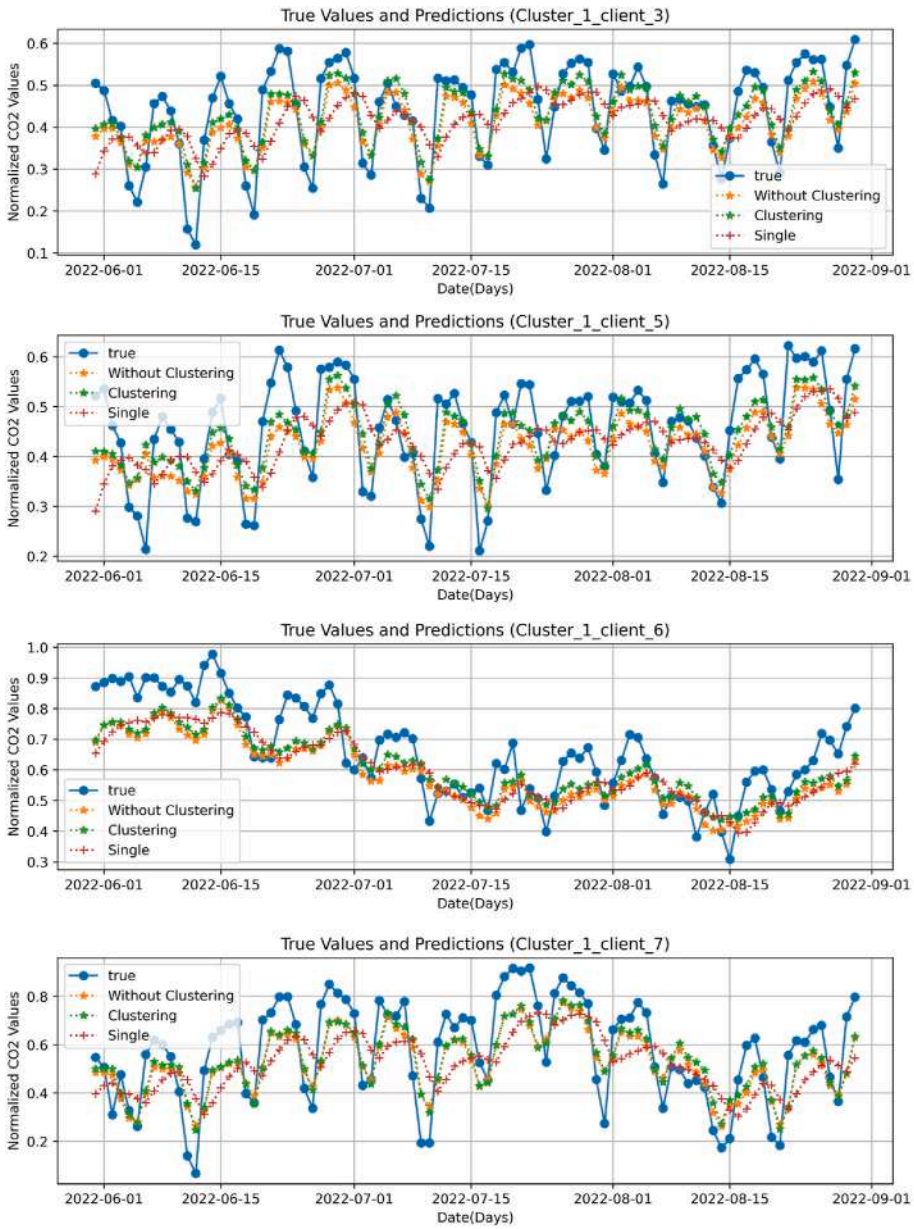

Fig. 6. Prediction effect of Cluster 1's 3, 5, 6, 7 clients on the test set.

single models, clustered federated models, and federated models without clustering. Fig. 5 shows the prediction effect of the clients of cluster 0 on the test set, and Figs. 6 and 7 show the prediction effect of the clients of cluster 1 on the test set. Figs. 5–7 show that the predicted values of the clustered federated model are closer to the true values than those of the federated model without clustering. This is a preliminary indication that the prediction of the clustered federated model has improved.

Tables 12 and 13 summarize the MAE and MSE values, respectively, for each client in the test dataset. In Fig. 8, the experimental results are visualized in Tables 12 and 13. Smaller MAE and MSE values indicate better prediction results. Therefore, by combining the graphs and tables, the following conclusions were obtained. Except for client 10, the prediction results of both the clustered federated model and the federated model without clustering are better than the prediction results of the clients' model training alone (single model), which indicates that the introduction of federated learning into carbon emission prediction improves the accuracy of the prediction model and can benefit the majority of clients in the federation; however, the MAE and MSE values for each client participating in clustering were improved compared to the federated model without clustering. The optimum MAE and MSE improved by 63.32% and 79.27%, respectively, indicating that the clustered federated model achieved better prediction results.

In addition, for client 10, the prediction results of the single model were better than those of the federated model without clustering, but worse than those of the clustered federated model. This shows that the proposed algorithm effectively improves the prediction accuracy of traditional federated learning. In summary, the proposed SARIMA-Fed-BiLSTM can predict carbon emissions quickly and accurately. More importantly, the local data of each client are not leaked to the other participants during the entire model training process, which effectively protects the data privacy and security of the participants.

5. Conclusions

To address potential data privacy security issues when using multi-source industrial big data for carbon emission prediction, this study proposed a federated learning prediction method based on SARIMA

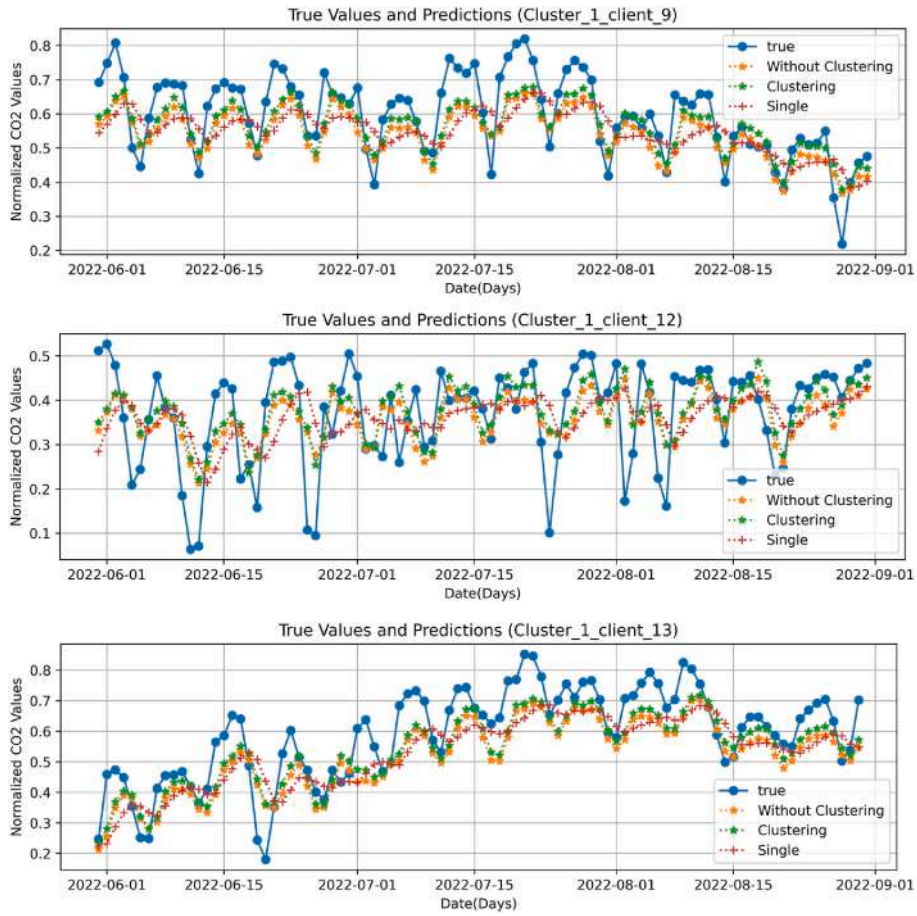

Fig. 7. Prediction effect of Cluster 1's 9, 12, 13 clients on the test set.

Table 12
MAE values of each client involved in clustering on the test set.

Cluster ID	Client ID	Single MAE	Clustering MAE	Without clustering MAE	Improvement rate
0	1	0.0388	**0.0139**	0.0379	**63.32%**
	2	0.0878	**0.0714**	0.1021	30.07%
	8	0.0826	**0.0595**	0.0672	11.46%
	10	0.0264	**0.0248**	0.0280	11.43%
1	3	0.0992	**0.0537**	0.0640	16.09%
	5	0.0903	**0.0552**	0.0656	15.85%
	6	0.0945	**0.0821**	0.0941	12.75%
	7	0.1682	**0.1082**	0.1129	4.16%
	9	0.0953	**0.0599**	0.0742	19.27%
	12	0.0941	**0.0705**	0.0772	8.68%
	13	0.0931	**0.0713**	0.0866	17.67%

Table 13
MSE values of each client involved in clustering on the test set.

Cluster ID	Client ID	Single MSE	Clustering MSE	Without clustering MSE	Improvement rate
0	1	0.00086	**0.00017**	0.00082	**79.27%**
	2	0.00474	**0.00320**	0.00608	47.37%
	8	0.00475	**0.00273**	0.00346	21.10%
	10	0.00054	**0.00049**	0.00059	16.95%
1	3	0.00630	**0.00205**	0.00276	25.72%
	5	0.00539	**0.00234**	0.00306	23.53%
	6	0.00611	**0.00474**	0.00605	21.65%
	7	0.01731	**0.00763**	0.00820	6.95%
	9	0.00598	**0.00275**	0.00383	28.20%
	12	0.00663	**0.00414**	0.00448	7.59%
	13	0.00630	**0.00377**	0.00520	27.50%

clustering. First, a general workflow of the system was proposed. Second, to accelerate the convergence of the global model, the SARIMA-based method was used to cluster all clients. Finally, the federated averaging algorithm was used to allow all clusters to train their respective BiLSTM carbon emission prediction models in parallel. The experimental results obtained from real data show that the proposed method can predict carbon emissions faster and more accurately. Within the optimal set of clusters (cluster 0), the MAE and MSE improved by 63.32% and 79.27%, respectively, and the convergence speed of the model improved by 73.17%. In addition, the raw data do not leave the local area during the entire federated learning process, which protects the data privacy and security of each participant. This innovative

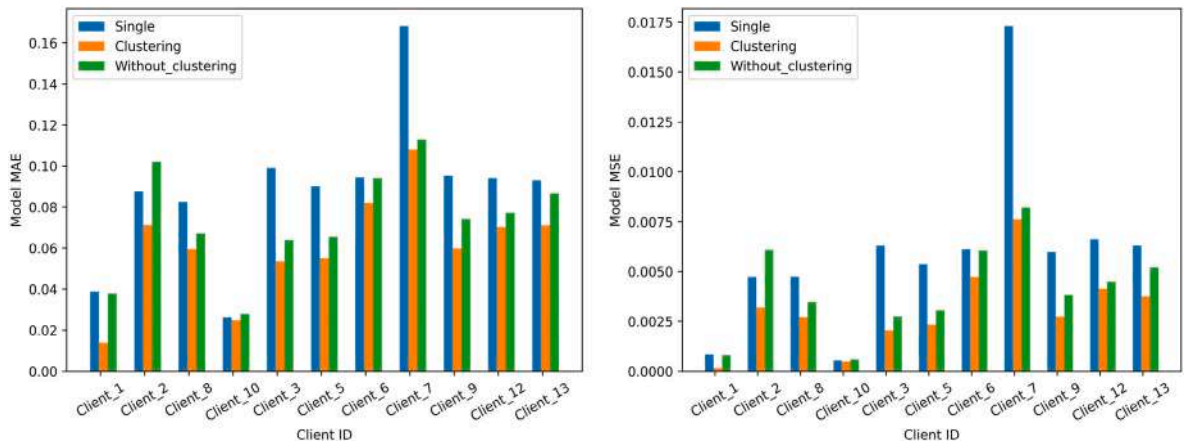

Fig. 8. Comparison of MAE and MSE values for each client participating in clustering.

research work enriches the methodological system of carbon emission prediction and helps relevant departments fully utilize carbon emission-related data in the industry for data analysis and policy making.

However, this study has some limitations. First, carbon emission prediction models in real scenarios are influenced by various factors such as industrial structure, energy efficiency, economic growth, and energy consumption. In this study, it was often difficult to achieve absolute accuracy in carbon emission prediction based only on historical time-series data of industrial sectors; therefore, the prediction effect requires further testing. Second, during the experiment, not every participant in the federation could improve the learning gain, for example, client 10, which means that they will lose their motivation to join the federation. This is also a major challenge in federated learning. Therefore, encouraging more participants to join the federation through a corresponding incentive mechanism is a considerable challenge. Finally, in our clustering method, clients with unique fitting parameters were not placed in any of the clusters, e.g., clients 1 and 4. This will result in them not being able to join any of the federations. Therefore, clustering is worth exploring. In the future, we will first consider designing a fair and reasonable incentive mechanism to encourage more participants to join the federation.

CRediT authorship contribution statement

Tianxu Cui: Investigation, Conceptualization, Methodology, Data curation, Formal analysis, Writing – original draft, Visualization, Writing – review & editing. **Ying Shi:** Visualization, Writing – review & editing. **Bo Lv:** Conceptualization, Methodology, Formal analysis, Writing – review & editing. **Rijia Ding:** Visualization, Writing – review & editing. **Xianqiang Li:** Data curation, Visualization.

Declaration of competing interest

The authors declare that they have no known competing financial interests or personal relationships that could have appeared to influence the work reported in this paper.

Data availability

The data are obtained from the global time series dataset of carbon emissions by industry sector published by the China Carbon Accounting Database (CEADs) (https://carbonmonitor.org.cn/downloads/) and are for scientific research purposes only.

Acknowledgments

This work was supported by the National Social Science Fund of China (No. 21BJY129), and the Key Technologies Research and Development Program (No. 2022YFF0607404).

References

Aïvodji, U.M., Gambs, S., Martin, A., 2019. IOTFLA: a secured and privacy-preserving smart home architecture implementing federated learning[C]//2019 IEEE security and privacy workshops (SPW). In: IEEE, pp. 175–180. https://doi.org/10.1109/SPW.2019.00041.

AlKheder, S., Almusalam, A., 2022. Forecasting of carbon dioxide emissions from power plants in Kuwait using United States Environmental Protection Agency, Intergovernmental panel on climate change, and machine learning methods. Renew. Energy 191, 819–827. https://doi.org/10.1016/j.renene.2022.04.023.

Appiah, M.O., 2018. Investigating the multivariate Granger causality between energy consumption, economic growth and CO2 emissions in Ghana. Energy Pol. 112, 198–208. https://doi.org/10.1016/j.enpol.2017.10.017.

Arora, V.K., Scinocca, J.F., Boer, G.J., et al., 2011. Carbon emission limits required to satisfy future representative concentration pathways of greenhouse gases. Geophys. Res. Lett. 38 (5), 387–404. https://doi.org/10.1029/2010GL046270.

Chen, Y., Qin, X., Wang, J., et al., 2020. Fedhealth: a federated transfer learning framework for wearable healthcare. IEEE Intell. Syst. 35 (4), 83–93. https://doi.org/10.1109/MIS.2020.2988604.

Dai, S., Niu, D., Han, Y., 2018. Forecasting of energy-related CO2 emissions in China based on GM (1, 1) and least squares support vector machine optimized by modified shuffled frog leaping algorithm for sustainability. Sustainability 10 (4), 958. https://doi.org/10.3390/su10040958.

Gao, M., Yang, H., Xiao, Q., et al., 2021. A novel fractional grey Riccati model for carbon emission prediction. J. Clean. Prod. 282, 124471 https://doi.org/10.1016/j.jclepro.2020.124471.

Gao, R., Li, X., Yu, H., 2021. Prediction method of green transportation carbon emission in smart city based on gray joint algorithm[C]//2021 6th International Conference on Smart Grid and Electrical Automation (ICSGEA). In: IEEE, 30-34. https://ieeexplore.ieee.org/abstract/document/9470267.

Ge, N., Li, G., Zhang, L., et al., 2022. Failure prediction in production line based on federated learning: an empirical study. J. Intell. Manuf. 33 (8), 2277–2294. https://doi.org/10.1007/s10845-021-01775-2.

Gholizadeh, N., Musilek, P., 2022. Federated learning with hyperparameter-based clustering for electrical load forecasting. Internet Things-Neth 17, 100470. https://doi.org/10.1016/j.iot.2021.100470.

Grid Stata, 2021. Plan of Carbon Peak and Carbon Neutrality of Electricity. http://www.sasac.gov.cn/n2588025/n2588124/c17342704/content.html.

Hakak, S., Ray, S., Khan, W.Z., et al., 2020. A framework for edge-assisted healthcare data analytics using federated learning[C]//2020 IEEE International Conference on Big Data (Big Data). IEEE 3423–3427. https://doi.org/10.1109/BigData50022.2020.9377873.

Hillmer, S.C., Tiao, G.C., 1982. An ARIMA-model-based approach to seasonal adjustment. J. Am. Stat. Assoc. 77 (377), 63–70. https://doi.org/10.1080/01621459.1982.10477767.

Huang, Y., Shen, L., Liu, H., 2019. Grey relational analysis, principal component analysis and forecasting of carbon emissions based on long short-term memory in China. J. Clean. Prod. 209, 415–423. https://doi.org/10.1016/j.jclepro.2018.10.128.

Intergovernmental Panel on Climate Change (IPCC), 2018. Global warming of 1.5° C: an IPCC special report on the impacts of global warming of 1.5° C above pre-industrial levels and related global greenhouse gas emission pathways. In: The Context of Strengthening the Global Response to the Threat of Climate Change, Sustainable Development, and Efforts to Eradicate Poverty.

Kairouz, P., McMahan, H.B., Avent, B., et al., 2021. Advances and open problems in federated learning. Found. Trends Mach. Le. 14 (1–2), 1–210. https://doi.org/10.1561/2200000083.

Konečný, J., McMahan, H.B., Ramage, D., et al., 2016. Federated Optimization: Distributed Machine Learning for On-Device Intelligence. https://doi.org/10.48550/arXiv.1610.02527 arXiv preprint arXiv:1610.02527.

Liu, Z., Guan, D., Moore, S., et al., 2015. Climate policy: steps to China's carbon peak. Nature 522 (7556), 279–281. https://doi.org/10.1038/522279a.

Liu, Y., James, J.Q., Kang, J., et al., 2020. Privacy-preserving traffic flow prediction: a federated learning approach. IEEE Internet Things 7 (8), 7751–7763. https://doi.org/10.1109/JIOT.2020.2991401.

Liu, Z., Ciais, P., Deng, Z., et al., 2020. Carbon Monitor, a near-real-time daily dataset of global CO2 emission from fossil fuel and cement production. Sci. Data 7 (1), 392. https://doi.org/10.1038/s41597-020-00708-7.

Liu, Q., Sun, S., Liu, M., et al., 2023. Online Spatio-Temporal Correlation-Based Federated Learning for Traffic Flow Forecasting. https://doi.org/10.48550/arXiv.2302.08658 arXiv preprint arXiv:2302.08658.

National Enegry Administration (NEA), 2017. The Clean Heating Plan for Northern and Northern Regions in Winter (2017-2021. http://www.gov.cn/xinwen/2017-12/20/content_5248855.htm.

Niu, D., Wang, K., Wu, J., et al., 2020. Can China achieve its 2030 carbon emissions commitment? Scenario analysis based on an improved general regression neural network. J. Clean. Prod. 243, 118558 https://doi.org/10.1016/j.jclepro.2019.118558.

Pourroostaei Ardakani, S., Du, N., Lin, C., et al., 2023. A federated learning-enabled predictive analysis to forecast stock market trends. J. Ambient Intell. Hum. Comput. 1–7 https://doi.org/10.1007/s12652-023-04570-4.

Qiao, W., Lu, H., Zhou, G., et al., 2020. A hybrid algorithm for carbon dioxide emissions forecasting based on improved lion swarm optimizer. J. Clean. Prod. 244, 118612 https://doi.org/10.1016/j.jclepro.2019.118612.

Saputra, Y.M., Hoang, D.T., Nguyen, D.N., et al., 2019. Energy demand prediction with federated learning for electric vehicle networks[C]//2019 IEEE global communications conference (GLOBECOM). IEEE 1–6. https://doi.org/10.1109/GLOBECOM38437.2019.9013587.

Siami-Namini, S., Tavakoli, N., Namin, A.S., 2019. The performance of LSTM and BiLSTM in forecasting time series[C]//2019 IEEE international conference on big data (big data). IEEE 3285–3292. https://doi.org/10.1109/BigData47090.2019.9005997.

Sun, W., Huang, C., 2022. Predictions of carbon emission intensity based on factor analysis and an improved extreme learning machine from the perspective of carbon emission efficiency. J. Clean. Prod. 338, 130414 https://doi.org/10.1016/j.jclepro.2022.130414.

Tun, Y.L., Thar, K., Thwal, C.M., et al., 2021. Federated learning based energy demand prediction with clustered aggregation[C]//2021 IEEE international conference on big data and smart computing (BigComp), 2021 IEEE 164–167.

United Nations Framework Convention on Climate Change (UNFCCC), 2015. In: Enhanced Actions on Climate Change: china's Intended Nationally Determined Contributions. China. http://unfccc.int/focus/indc_portal/items/8766.php.

Van, Ruijven, B., De, J., Cian, E., Sue Wing, I., 2019. Amplification of future energy demand growth due to climate change. Nat. Commun. 10 (1), 2762. https://doi.org/10.1038/s41467-019-10399-3.

Wang, A., Lin, B., 2017. Assessing CO2 emissions in China's commercial sector: determinants and reduction strategies. J. Clean. Prod. 164, 1542–1552. https://doi.org/10.1016/j.jclepro.2017.07.058.

Wang, H., Zhang, Z., 2022. Forecasting Chinese provincial carbon emissions using a novel grey prediction model considering spatial correlation. Expert Syst. Appl. 209, 118261 https://doi.org/10.1016/j.eswa.2022.118261.

Wu, Y., Shen, J., Zhang, X., et al., 2017. Reprint of: the impact of urbanization on carbon emissions in developing countries: a Chinese study based on the U-Kaya method. J. Clean. Prod. 163, S284–S298. https://doi.org/10.1016/j.jclepro.2017.05.144.

Yang, H., O'Connell, J.F., 2020. Short-term carbon emissions forecast for aviation industry in Shanghai[J]. J. Clean. Prod. 275, 122734 https://doi.org/10.1016/j.jclepro.2020.122734.

Yang, Q., Liu, Y., Chen, T., Tong, Y., 2019. Federated machine learning: concept and applications. ACM TIST 10 (2), 1–19. https://doi.org/10.1145/3298981.

Yu, Y., Si, X., Hu, C., et al., 2019. A review of recurrent neural networks: LSTM cells and network architectures. Neural Comput. 31 (7), 1235–1270. https://doi.org/10.1162/neco_a_01199.

Yu, T., Li, T., Sun, Y., et al., 2020. Learning context-aware policies from multiple smart homes via federated multi-task learning[C]//2020 IEEE/ACM Fifth International Conference on Internet-of-Things Design and Implementation (IoTDI). IEEE 104–115. https://doi.org/10.1109/IoTDI49375.2020.00017.

Yu, H., Chen, Z., Zhang, X., et al., 2021. Fedhar: semi-supervised online learning for personalized federated human activity recognition. IEEE Trans. Mobile Comput. https://doi.org/10.1109/TMC.2021.3136853.

Zhang, G., Zhu, S., Bai, X., 2022. Federated learning-based multi-energy load forecasting method using CNN-Attention-LSTM model. Sustainability 14 (19), 12843. https://doi.org/10.3390/su141912843.

Zhao, Y., Zhao, J., Yang, M., et al., 2020. Local differential privacy-based federated learning for internet of things. IEEE Internet Things 8 (11), 8836–8853. https://doi.org/10.1109/JIOT.2020.3037194.

Zhao, X., Ma, X., Chen, B., et al., 2022. Challenges toward carbon neutrality in China: strategies and countermeasures. Resour. Conserv. Recycl. 176, 105959 https://doi.org/10.1016/j.resconrec.2021.105959.

Zheng, G., Kong, L., Brintrup, A., 2023. Federated machine learning for privacy preserving, collective supply chain risk prediction. Int. J. Prod. Res. https://doi.org/10.1080/00207543.2022.2164628.