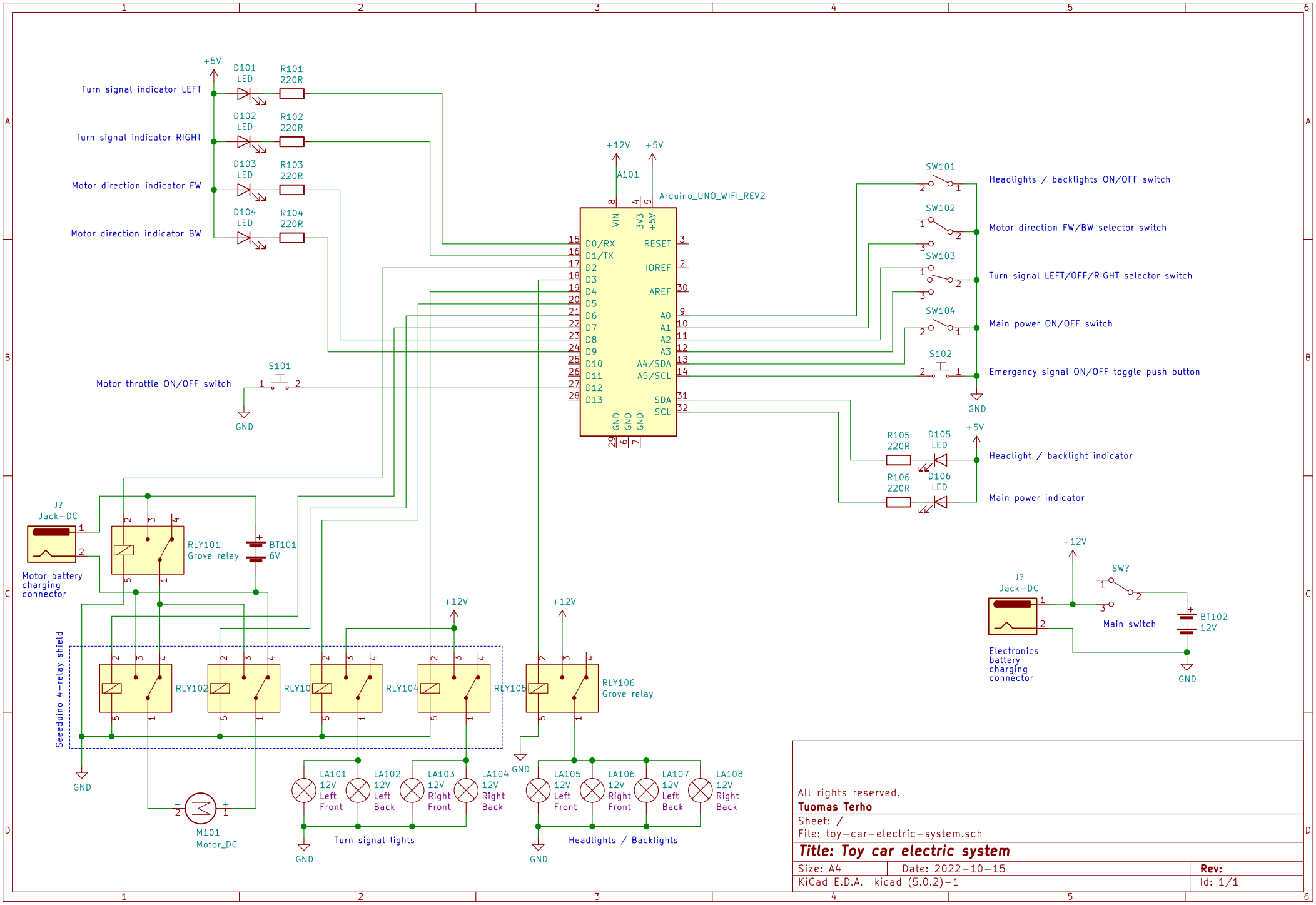

All rights reserved.

Tuomas Terho

Sheet: /

File: toy-car-electric-system.sch

Title: Toy car electric system

Size: A4	Date: 2022-10-15	Rev:
KiCad E.D.A. kicad (5.0.2)-1		Id: 1/1