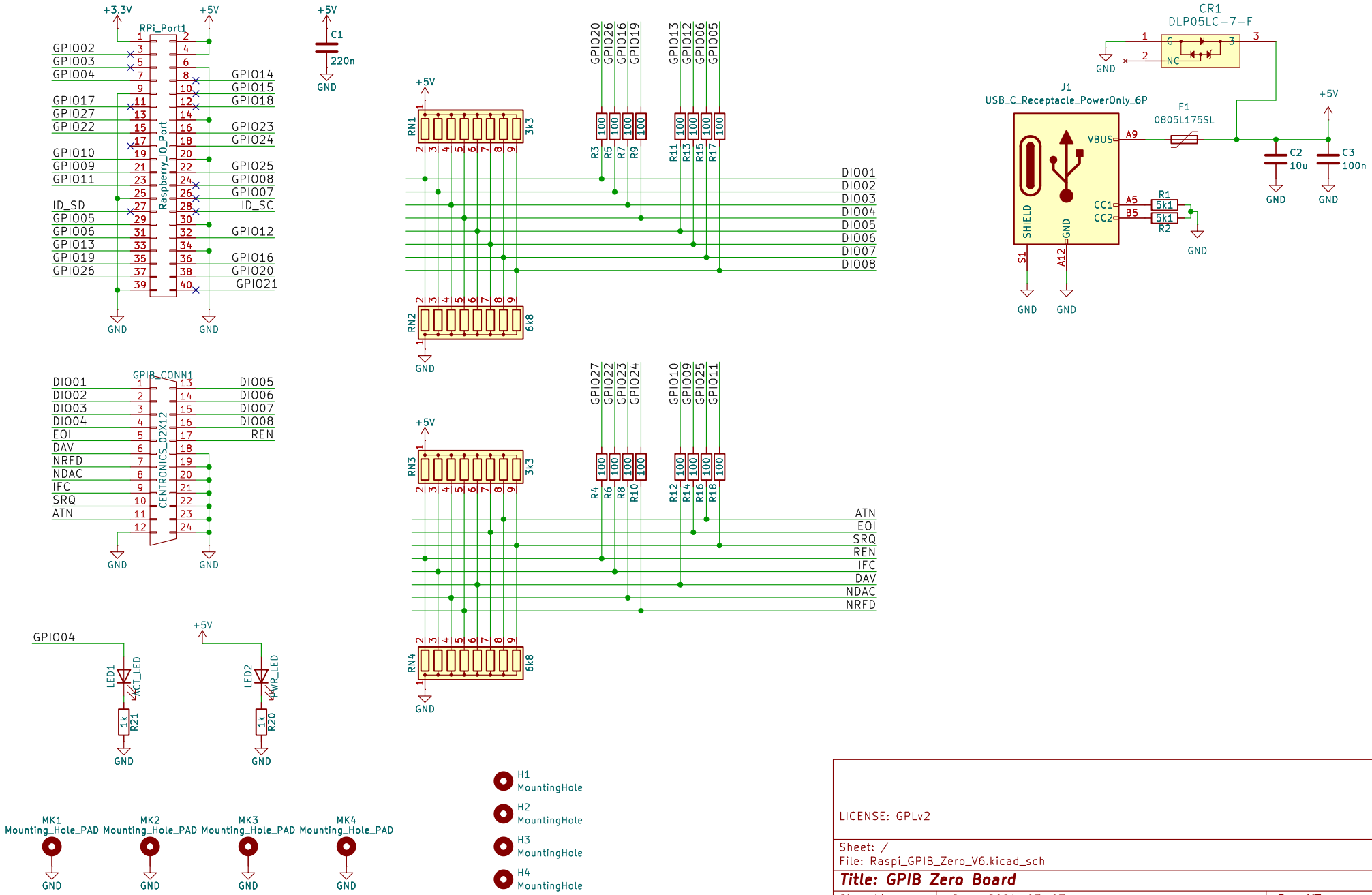

LICENSE: GPLv2

Sheet: /
File: Raspi_GPIB_Zero_V6.kicad_sch

Title: GPIB Zero Board

Size: A4	Date: 2024-03-03	Rev: V7
KiCad E.D.A. 8.0.1		Id: 1/1