Leader PIC

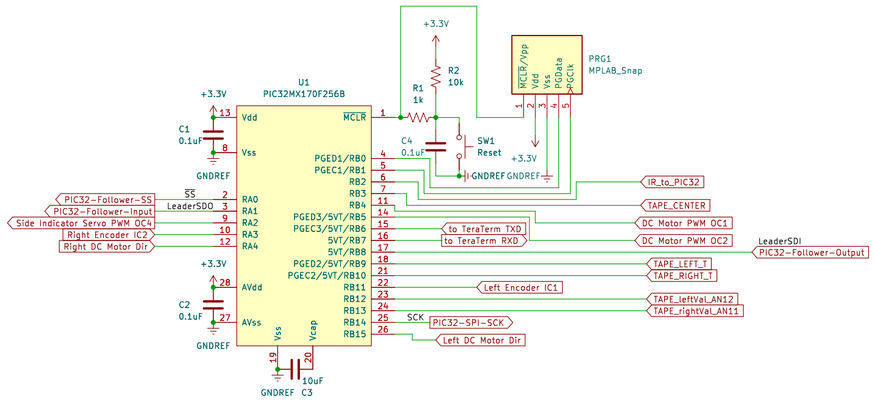

Follower PIC

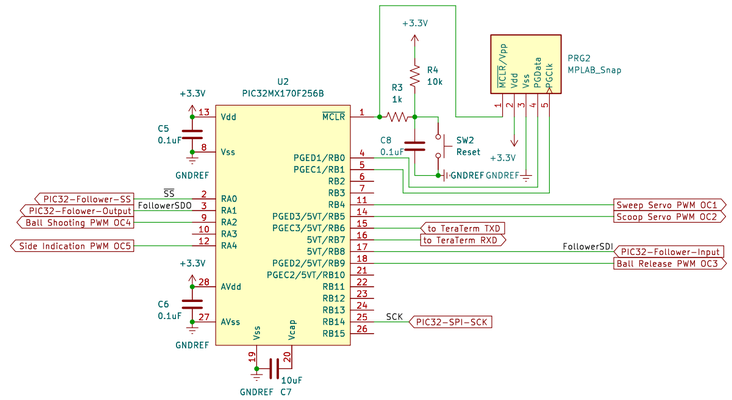

Power Delivery

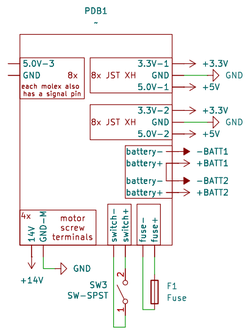

Sensors

IR Beacon Sensor

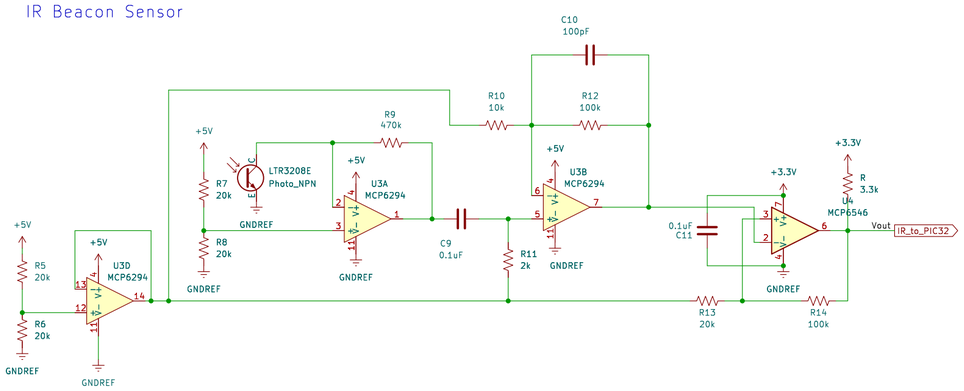

Tape Sensors

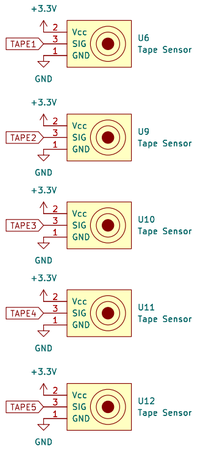

Motors

Servo Motors

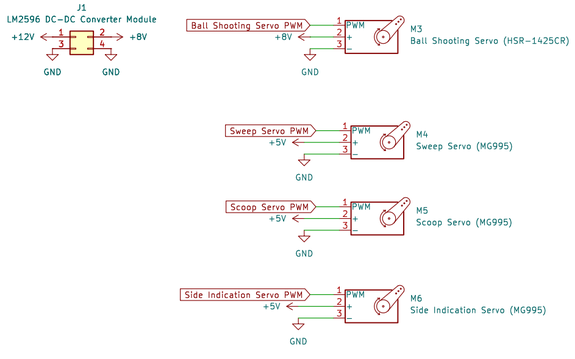

Drive Motors

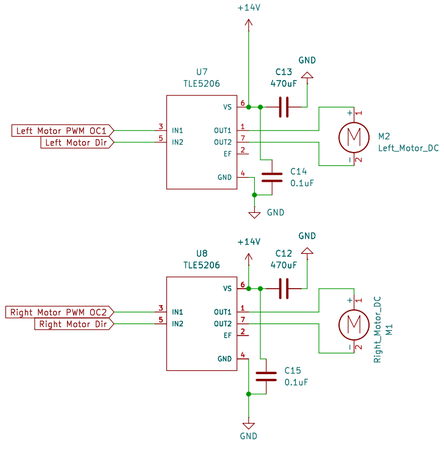

Motor Encoders

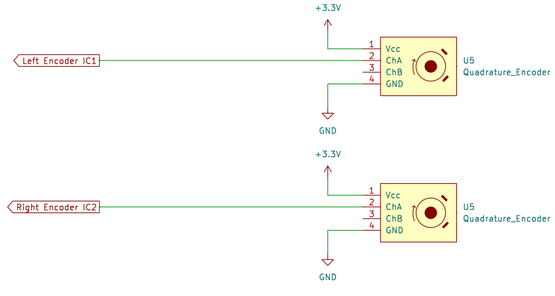

Sheet: /
File: Combined.kicad_sch

Title:

Size: C	Date:	Rev:
KiCad E.D.A. 9.0.7		Id: 1/1