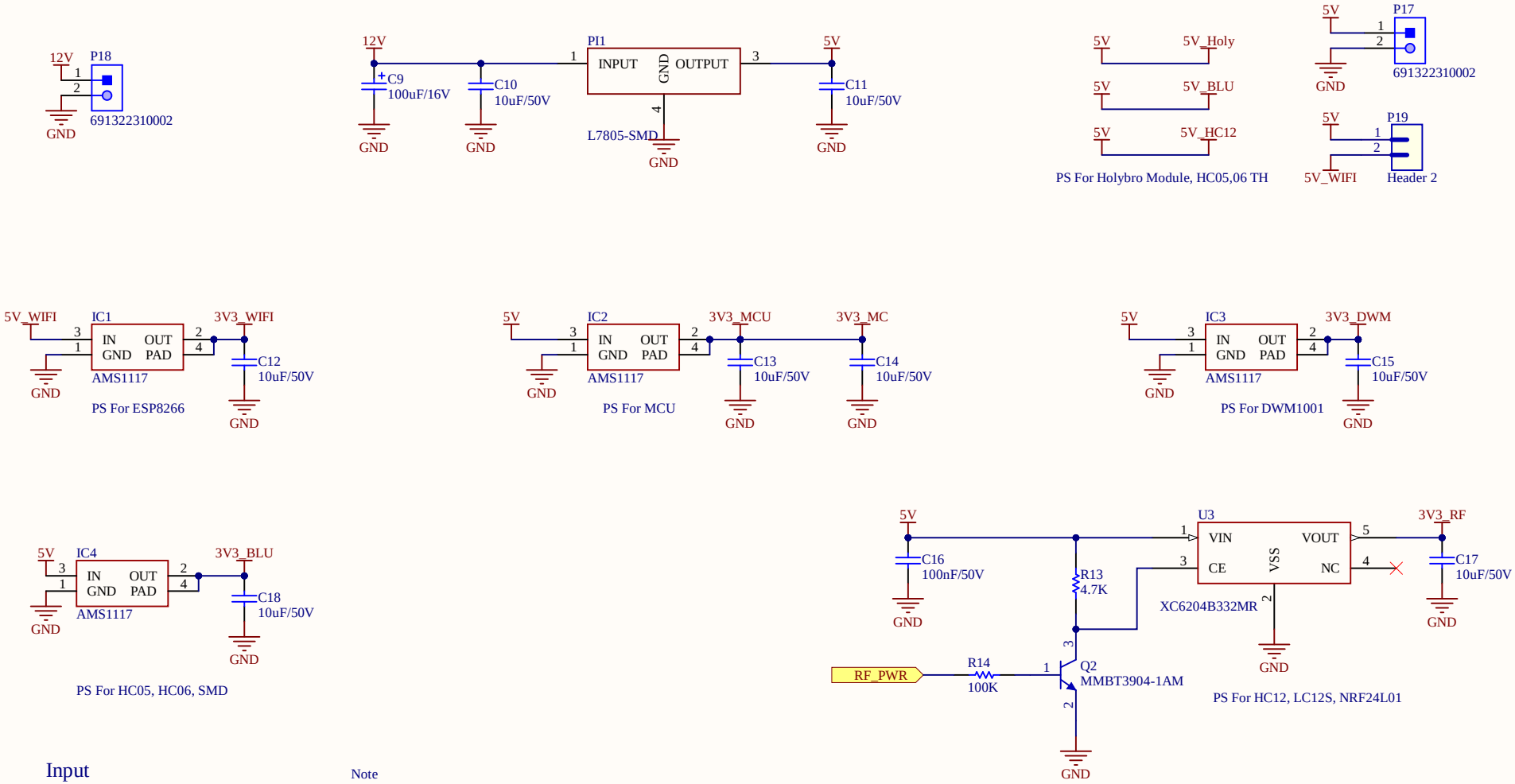

Input

12V

Output

5V
5V_Holy
5V_BLU
5V_HC12

3V3_MCU
3V3_MC
3V3_WIFI
3V3_BLU
3V3_RF
3V3_DWM

Note

LC12S: 3V3	HC05-06 TH: 3V3 - 5V
HC-12: 3V3 - 5V	HC05-06 SMD: 3V3
NRF24L01: 3V3	ESP8266: 3V3
Holybro: 5V	

Project	PIFWRobot		PIF Club
Revision	1.0.0	Sheet 1 of 8	304B1, HCMUT,
Date	3/12/2021	Time 12:55:52 PM	Ly Thuong Kiet St.,
Author	Van Tuan Ngo		District 10, HCM, VN
File	power_supply.SchDoc		

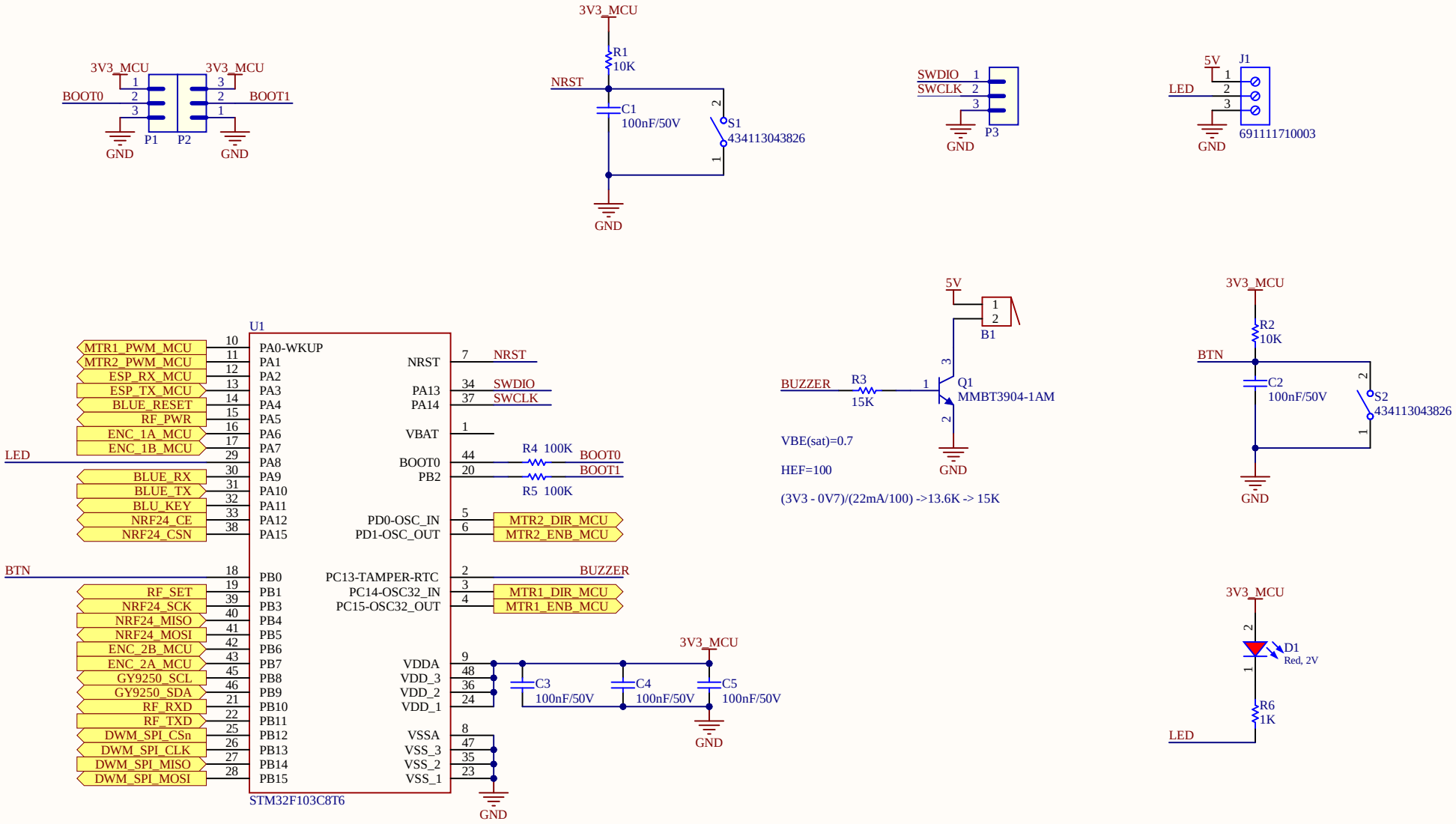

Project	PIFWRobot		PIF Club
Revision	1.0.0	Sheet 3 of 8	304B1, HCMUT,
Date	3/12/2021	Time 12:55:52 PM	Ly Thuong Kiet St.,
Author	Van Tuan Ngo		District 10, HCM, VN
File	mcu.SchDoc		

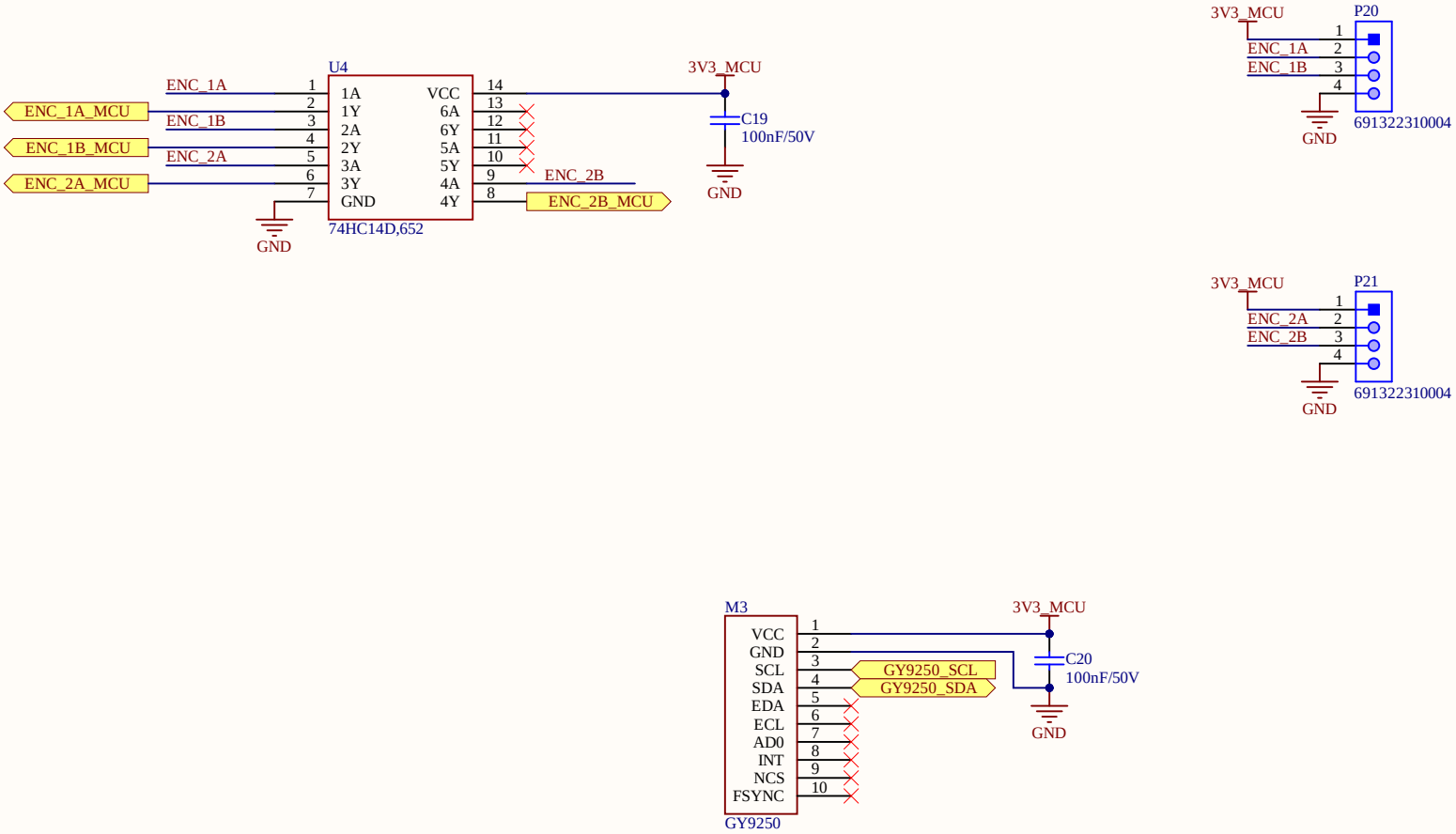

Project	PIFWRobot		PIF Club
Revision	1.0.0	Sheet 4 of 8	304B1, HCMUT,
Date	3/12/2021	Time 12:55:53 PM	Ly Thuong Kiet St.,
Author	Van Tuan Ngo		District 10, HCM, VN
File	sensor.SchDoc		

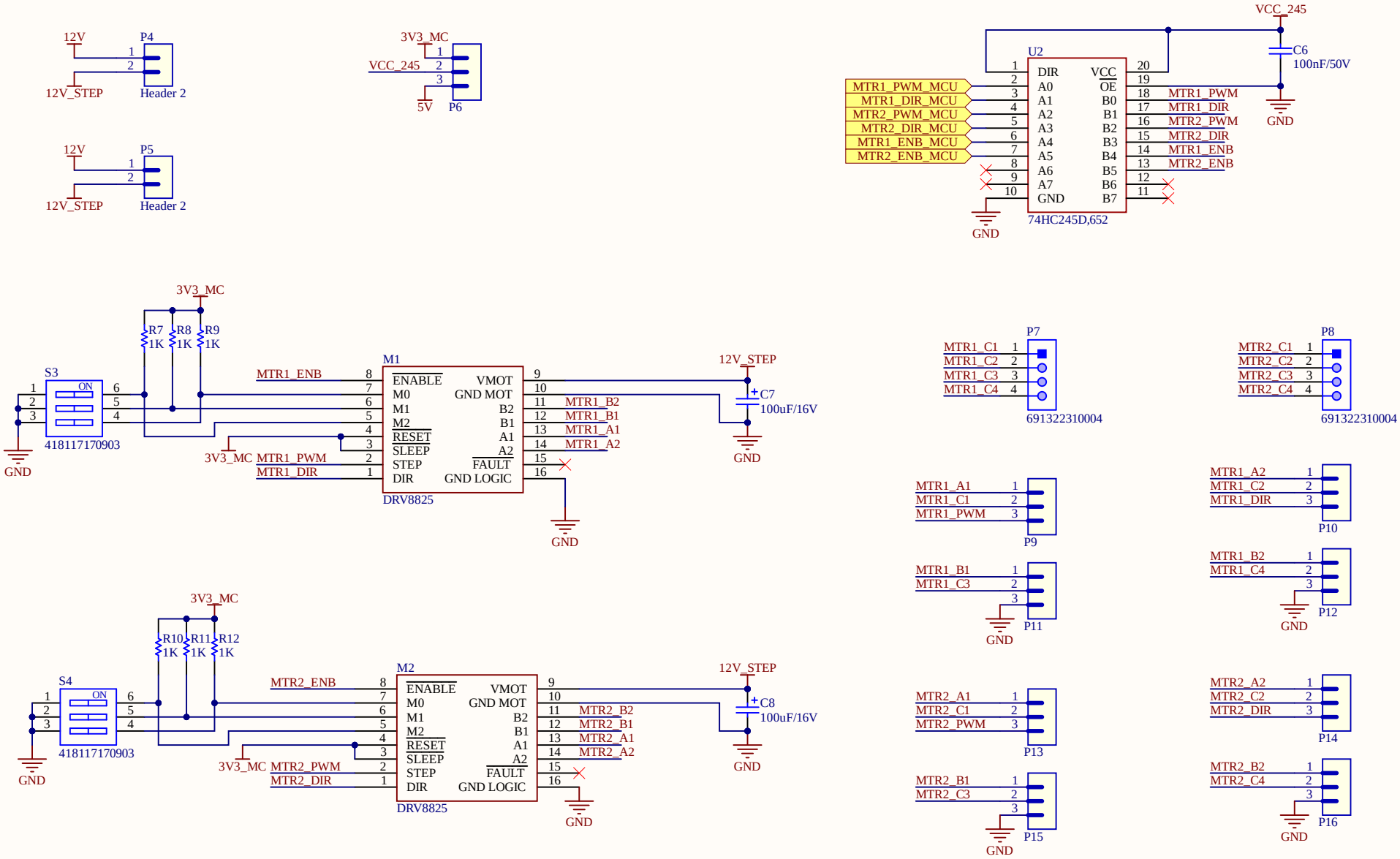

Project	PIFWRobot		PIF Club
Revision	1.0.0	Sheet 2 of 8	304B1, HCMUT,
Date	3/12/2021	Time 12:55:54 PM	Ly Thuong Kiet St.,
Author	Van Tuan Ngo		District 10, HCM, VN
File	motor_controller.SchDoc		

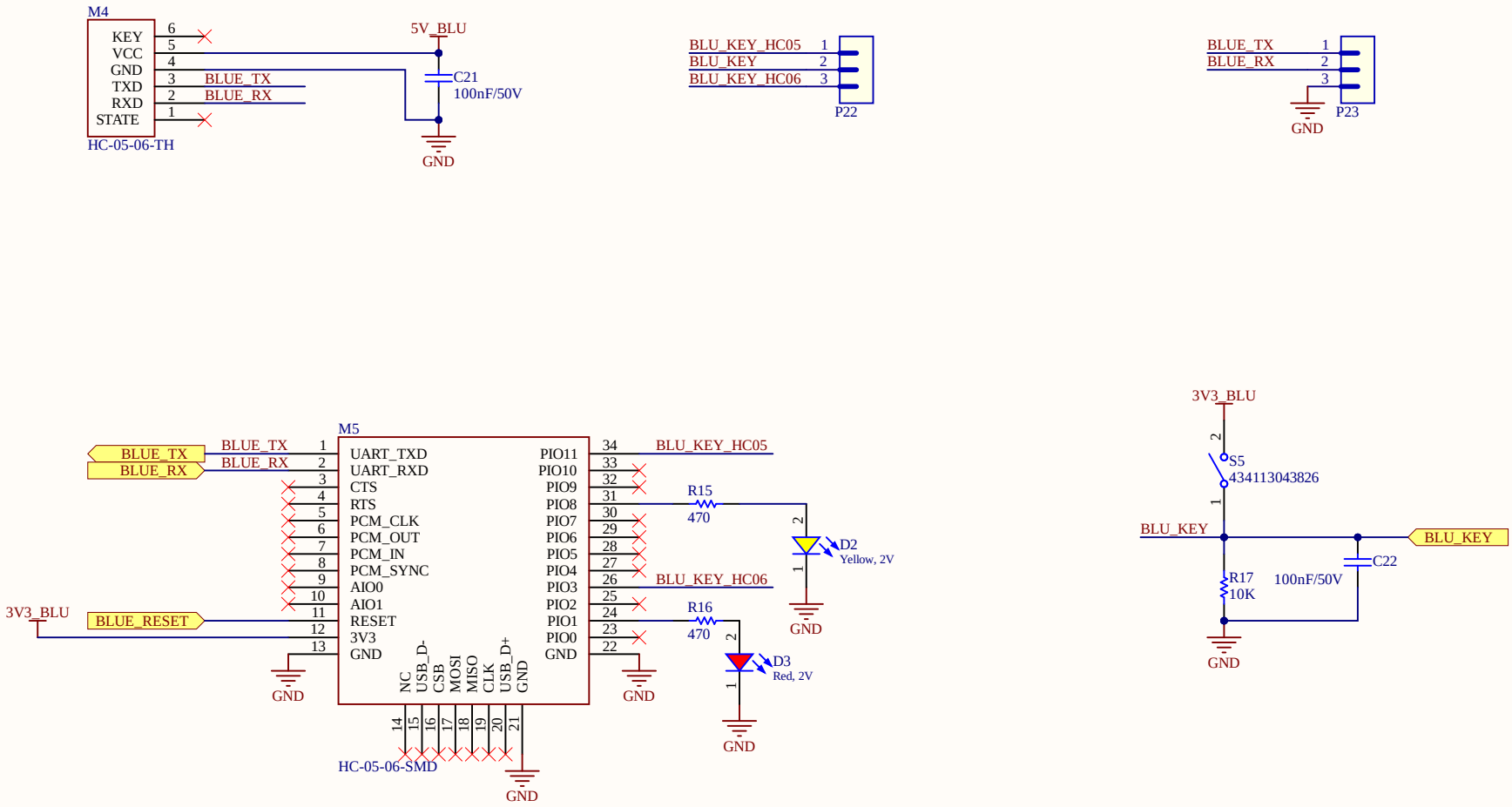

Project	PIFWRobot		PIF Club
Revision	1.0.0	Sheet 5 of 8	304B1, HCMUT,
Date	3/12/2021	Time 12:55:54 PM	Ly Thuong Kiet St.,
Author	Van Tuan Ngo		District 10, HCM, VN
File	bluetooth.SchDoc		

MATTERS NEEDING ATTENTION

On every boot/reset/wakeup,

GPIO15 MUST keep LOW, GPIO2 MUST keep HIGH.

GPIO0 HIGH ->RUN MODE, LOW -> FLASH MODE.

When you need to use the sleep mode,GPIO16 and RST should be connected,

and GPIO16 will output LOW to reset the system at the time of wakeup.

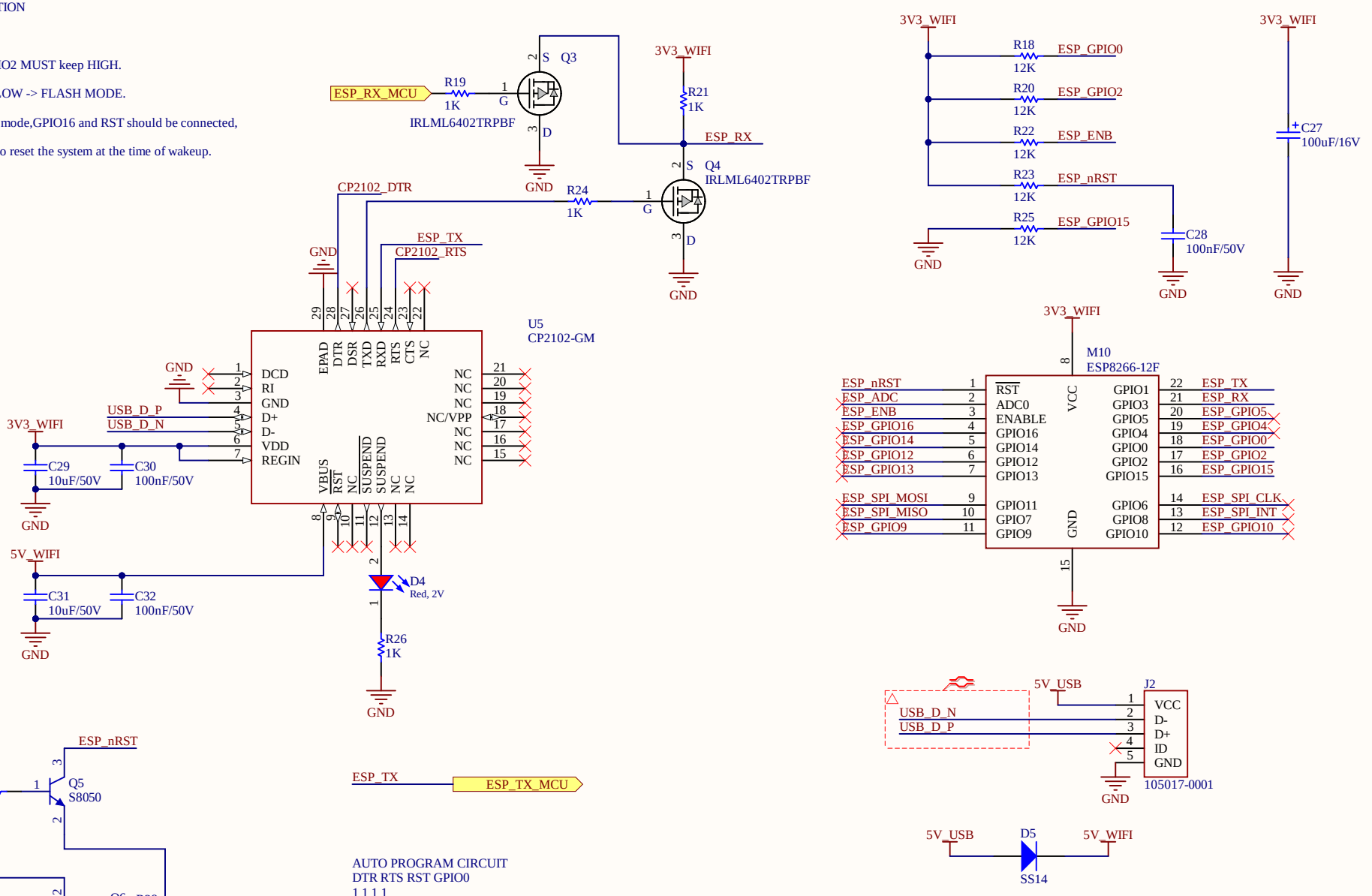

Project	PIFWRobot		PIF Club
Revision	1.0.0	Sheet 6 of 8	304B1, HCMUT,
Date	3/12/2021	Time 12:55:54 PM	Ly Thuong Kiet St.,
Author	Van Tuan Ngo		District 10, HCM, VN
File	wifi.SchDoc		

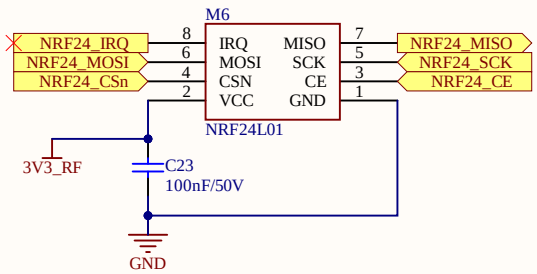

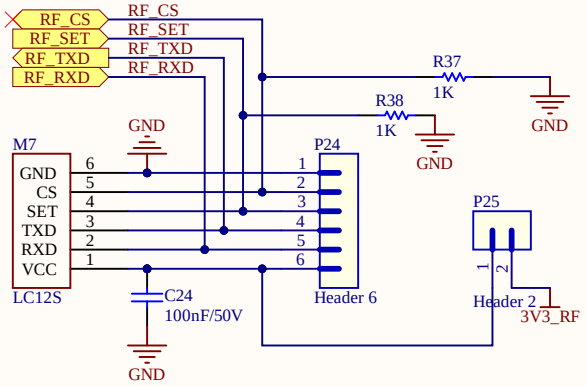

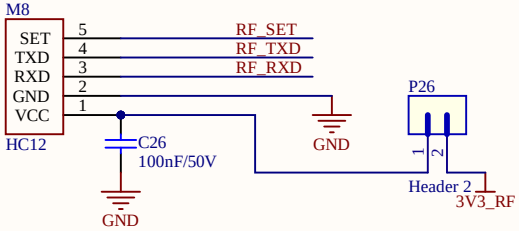

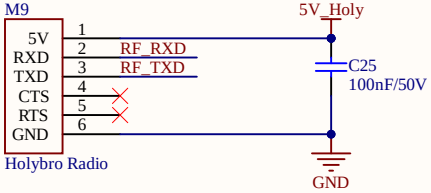

Project	PIFWRobot		PIF Club
Revision	1.0.0	Sheet 7 of 8	304B1, HCMUT,
Date	3/12/2021	Time 12:55:55 PM	Ly Thuong Kiet St.,
Author	Van Tuan Ngo		District 10, HCM, VN
File	radio_frequency.SchDoc		

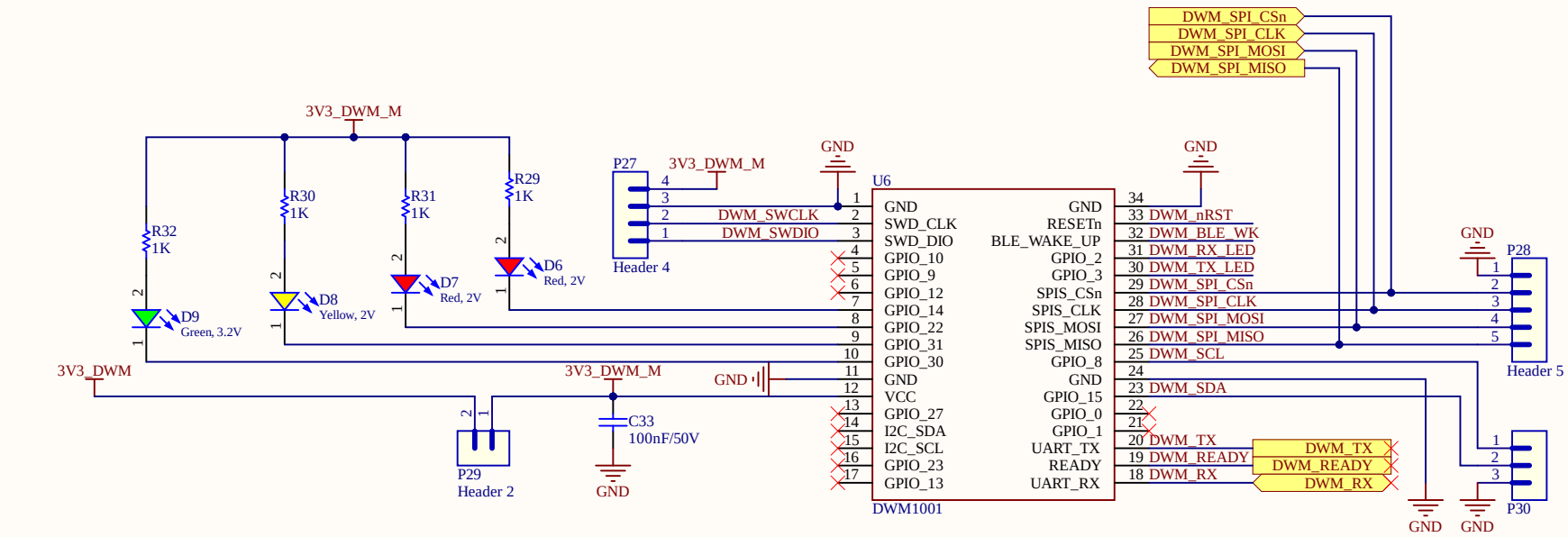

Project	PIFWRobot		PIF Club
Revision	1.0.0	Sheet 8 of 8	304B1, HCMUT,
Date	3/12/2021	Time 12:55:55 PM	Ly Thuong Kiet St.,
Author	Van Tuan Ngo		District 10, HCM, VN
File	decawave.SchDoc		

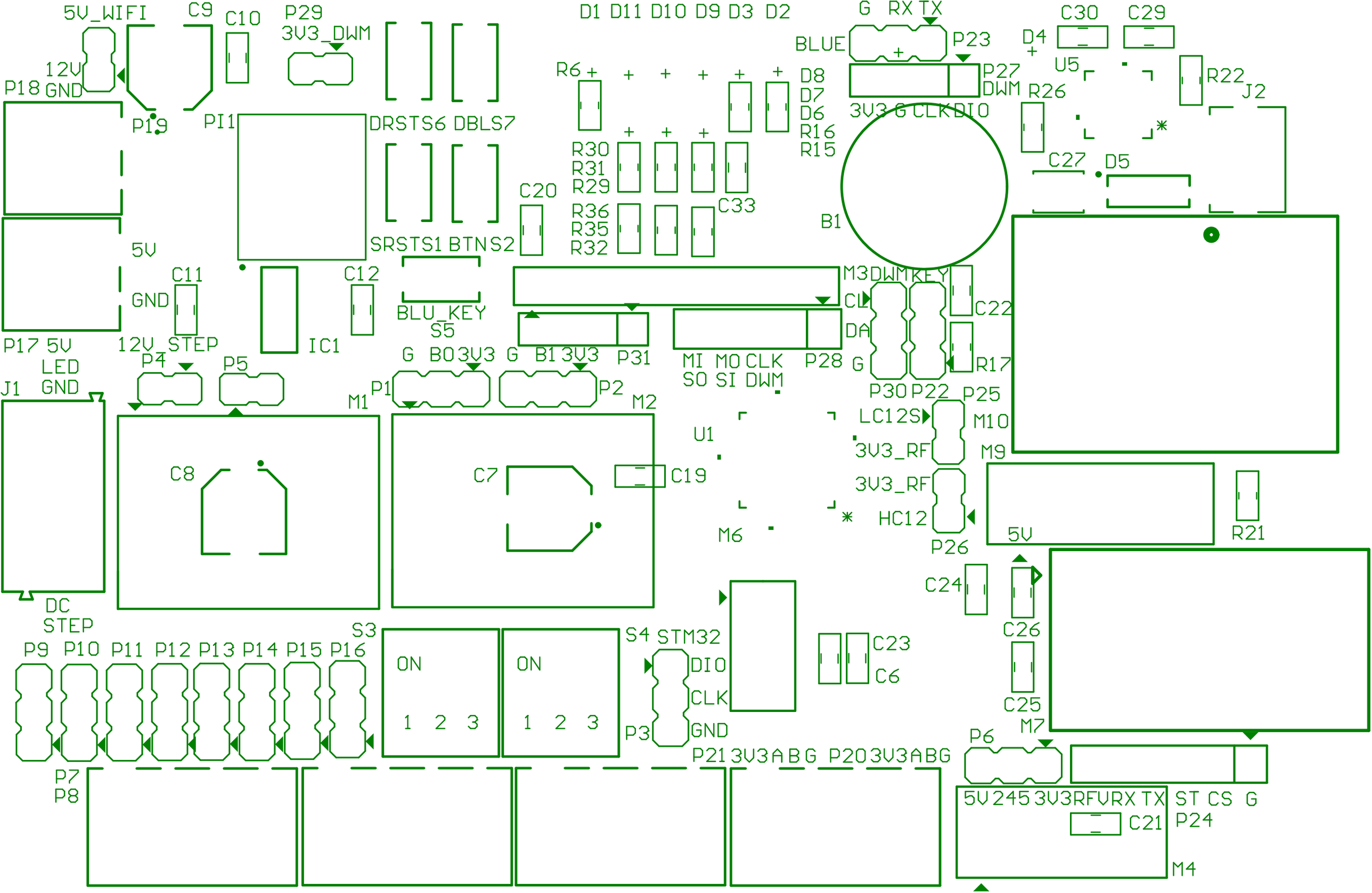
5V_WIFI
C9
C10
P29
3V3_DWM
D1 D11 D10 D9 D3 D2
G RX TX
C30
C29
BLUE
P23
D4
U5
12V
P18 GND
P19
PI1
DRSTS6 DBLS7
R6
D8
D7
D6
R16
R15
P27
DWM
3V3 G CLK DIO
R26
R22
J2
R30
R31
R29
R36
R35
R32
C20
C33
B1
C27
D5
5V
SRSTS1 BTNS2
C11
C12
GND
BLU_KEY
S5
M3 DWM KEY
CL
DA
G
C22
R17
P17 5V
12V STEP
IC1
P31
MI MO CLK
SO SI DWM
P28
LED
GND
J1
P4
P5
G B0 3V3 G B1 3V3
P1
P2
M1
M2
P30 P22
P25
LC12S
M10
U1
3V3_RF
M9
C8
C7
C19
3V3_RF
HC12
P26
5V
R21
M6
C24
C26
DC
STEP
S3
S4 STM32
C23
C6
P9 P10 P11 P12 P13 P14 P15 P16
ON
1 2 3
ON
1 2 3
DIO
CLK
GND
P3
C25
M7
P6
P7
P8
P21 3V3ABG P20 3V3ABG
5V 245 3V3RFVRX TX
ST CS G
C21
P24
M4

IC4
R34
R33
C35
C17
U6
M5
C2
C34
C18
IC3
R2
R13
U3
C16
C15
R1
Q2
IC2
C13
C1
R14
C14
Q1
R3
R28
Q6
R27
Q5
C32
R20
C31
Q3
R18
Q4
R19
R25
R24
R23
C28
M8
U2
R5
C3
U4
C5
C4
R4
R11
R12
R9
R10
R7
R8
R37
R38
polyttoriova

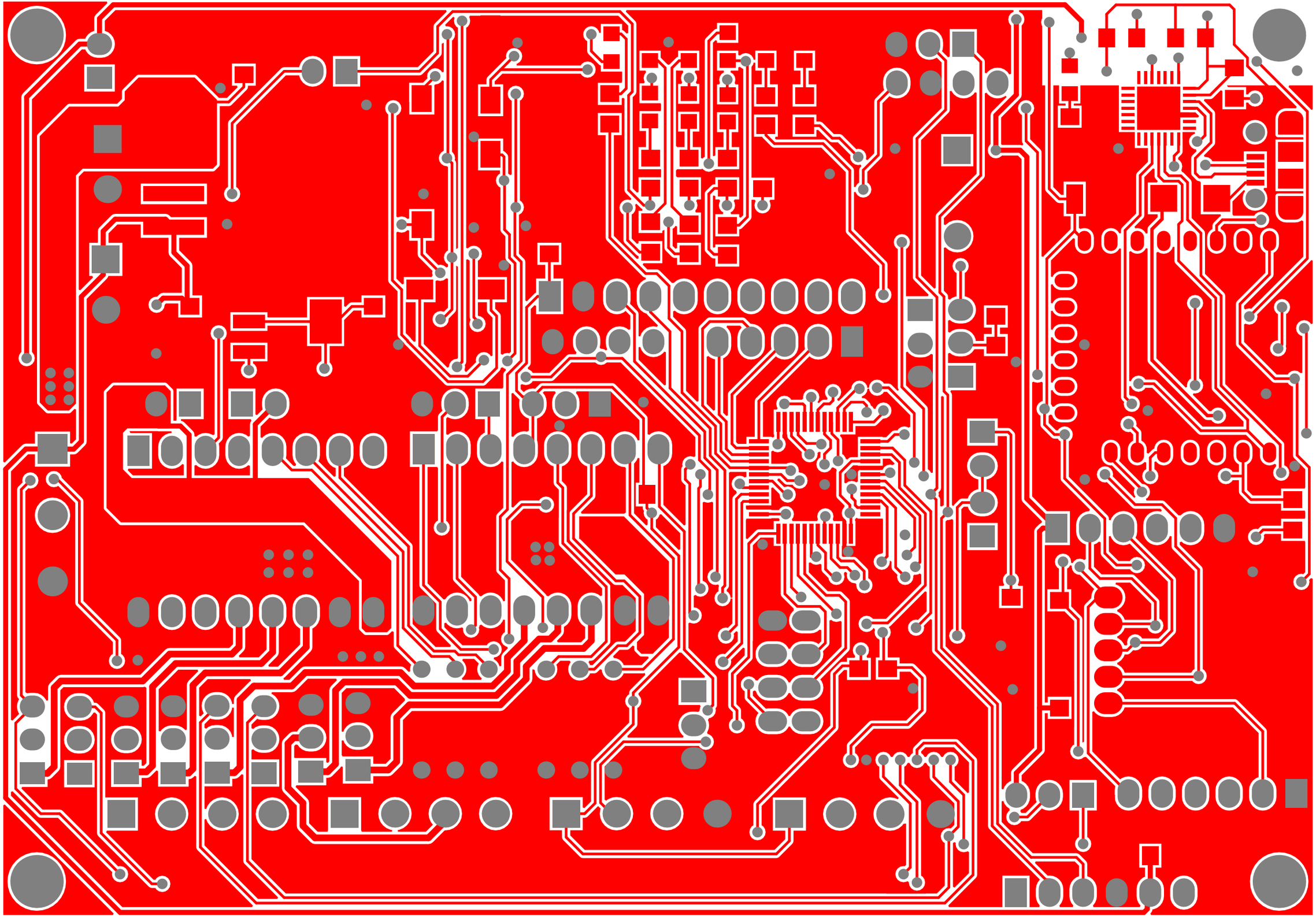

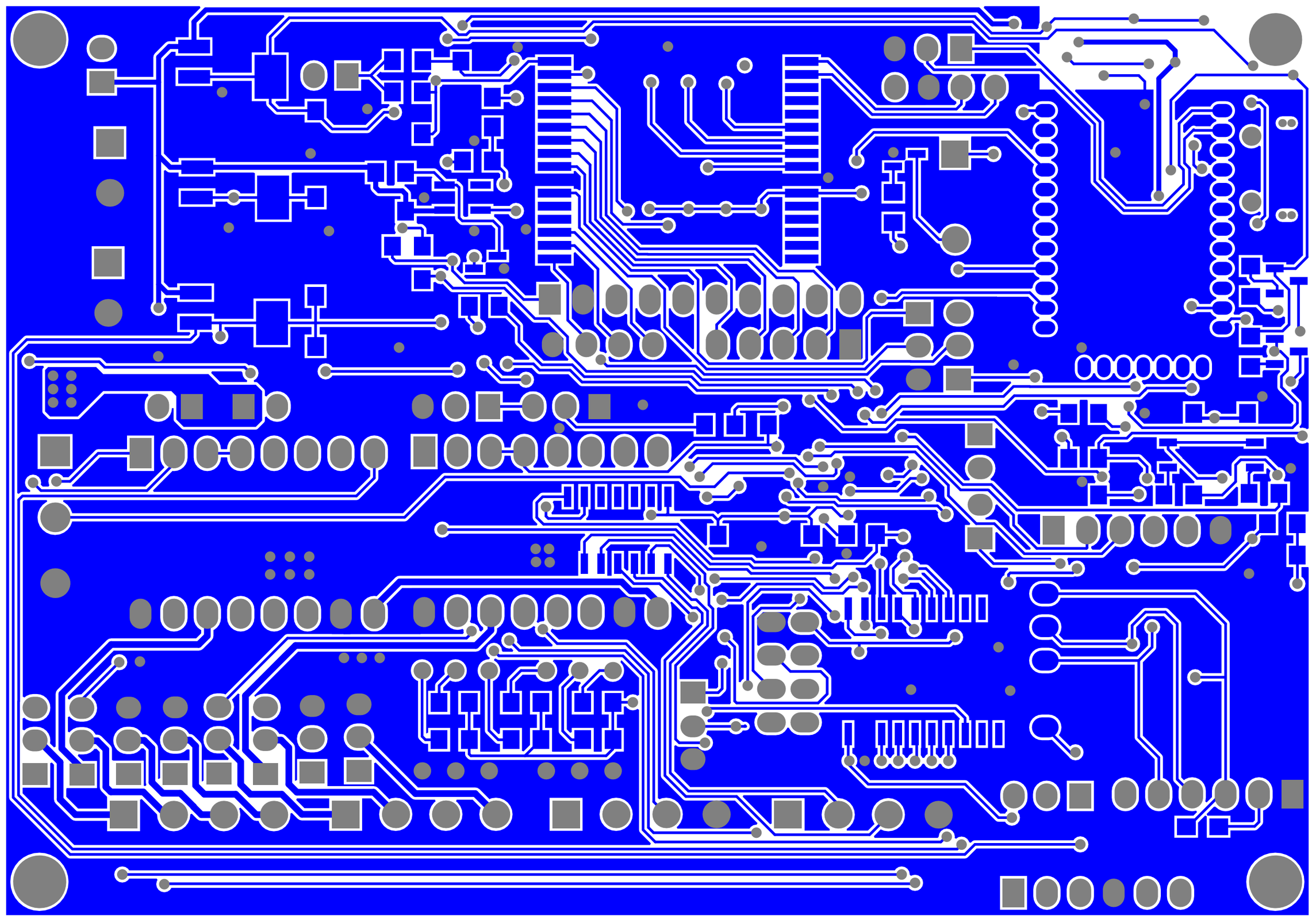

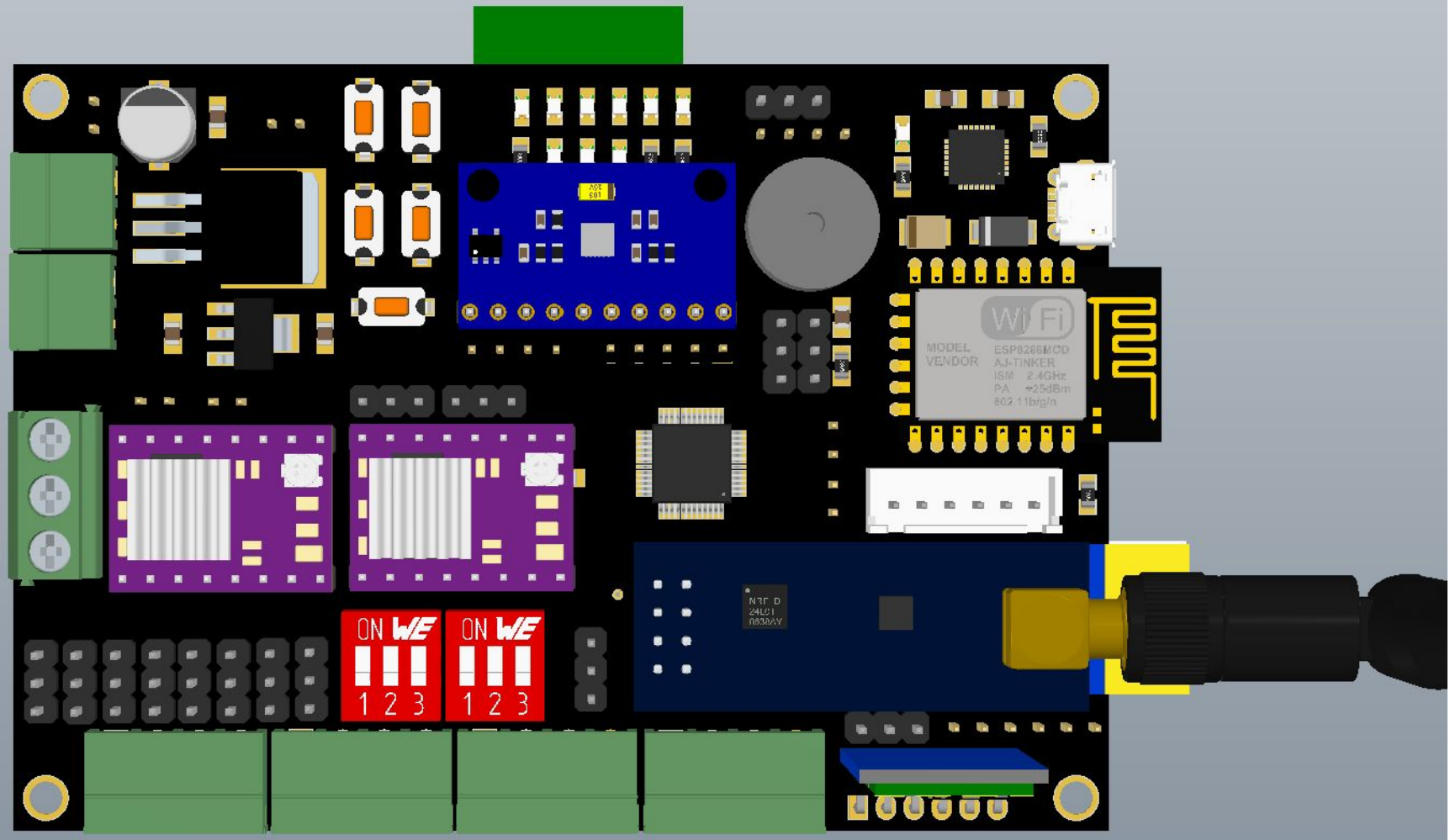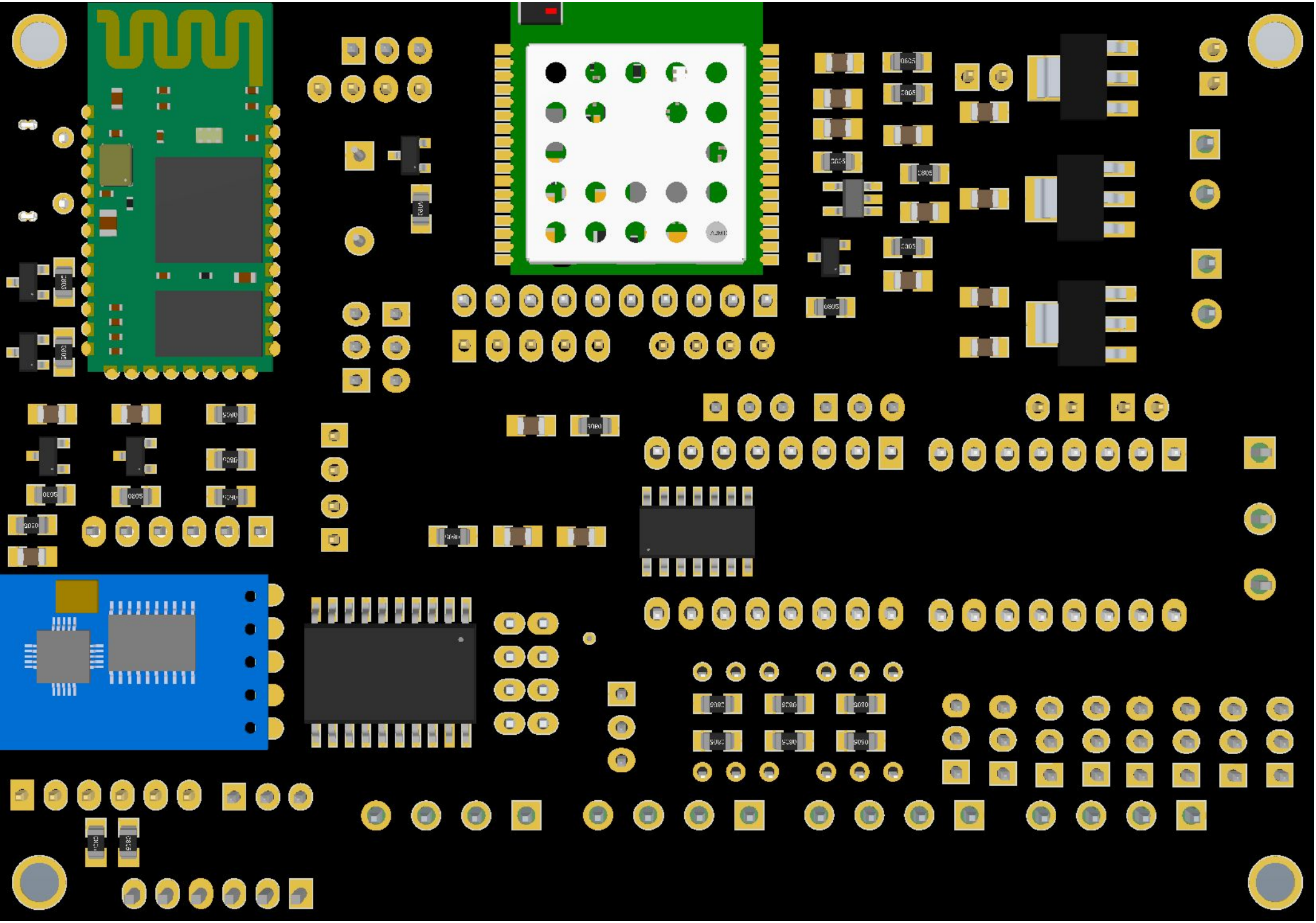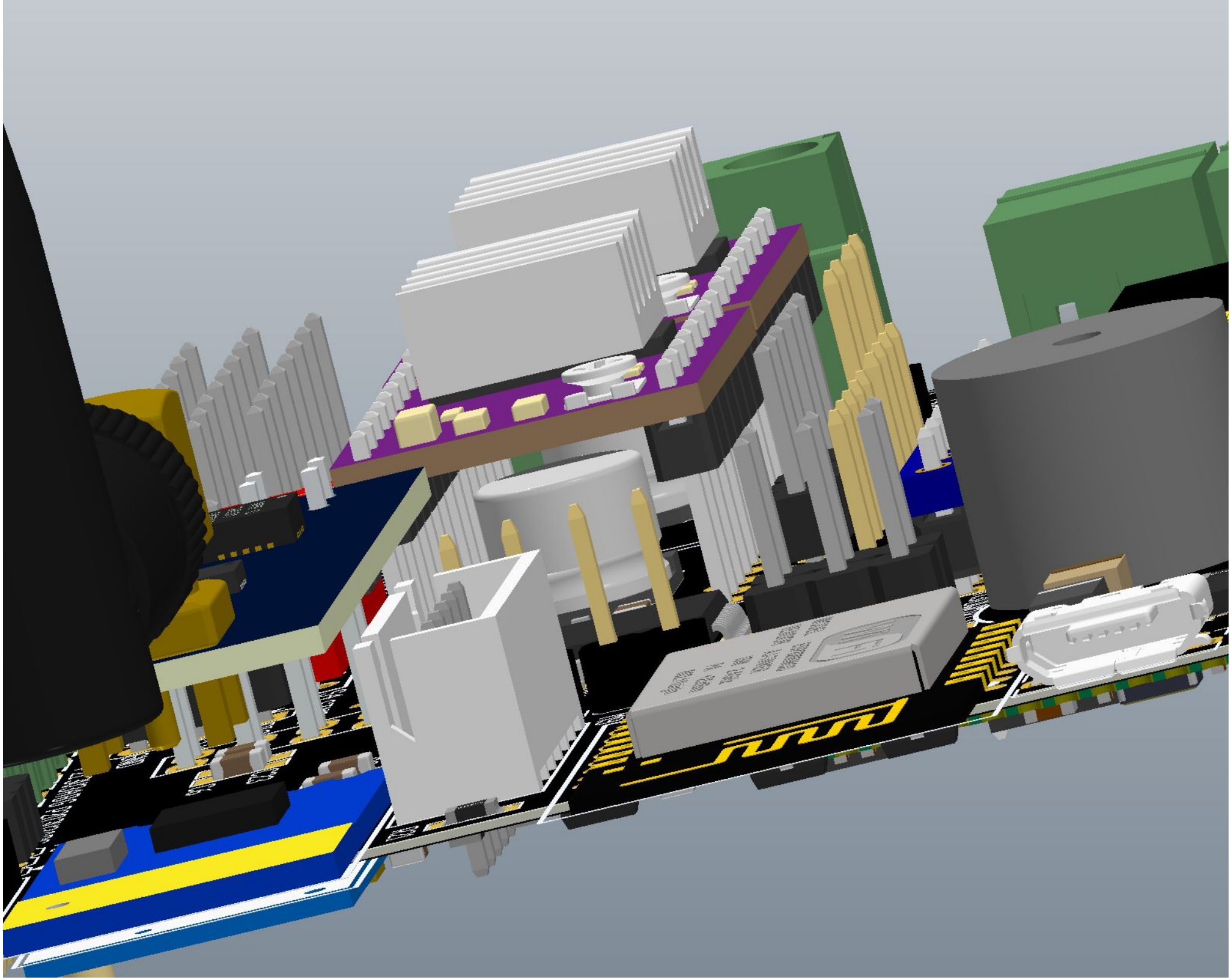
ON WE
1 2 3
ON WE
1 2 3
MODEL ESP8266MOD
VENDOR AI-TINKER
ISM 2.4GHz
PA +25dBm
802.11b/g/n