trigger_daq2.vi
D:\tuan\confocal\labview_kinesis\trigger_daq2.vi
Last modified on 4/27/2026 at 10:56 PM
Printed on 4/28/2026 at 9:57 AM

trigger_daq2.vi

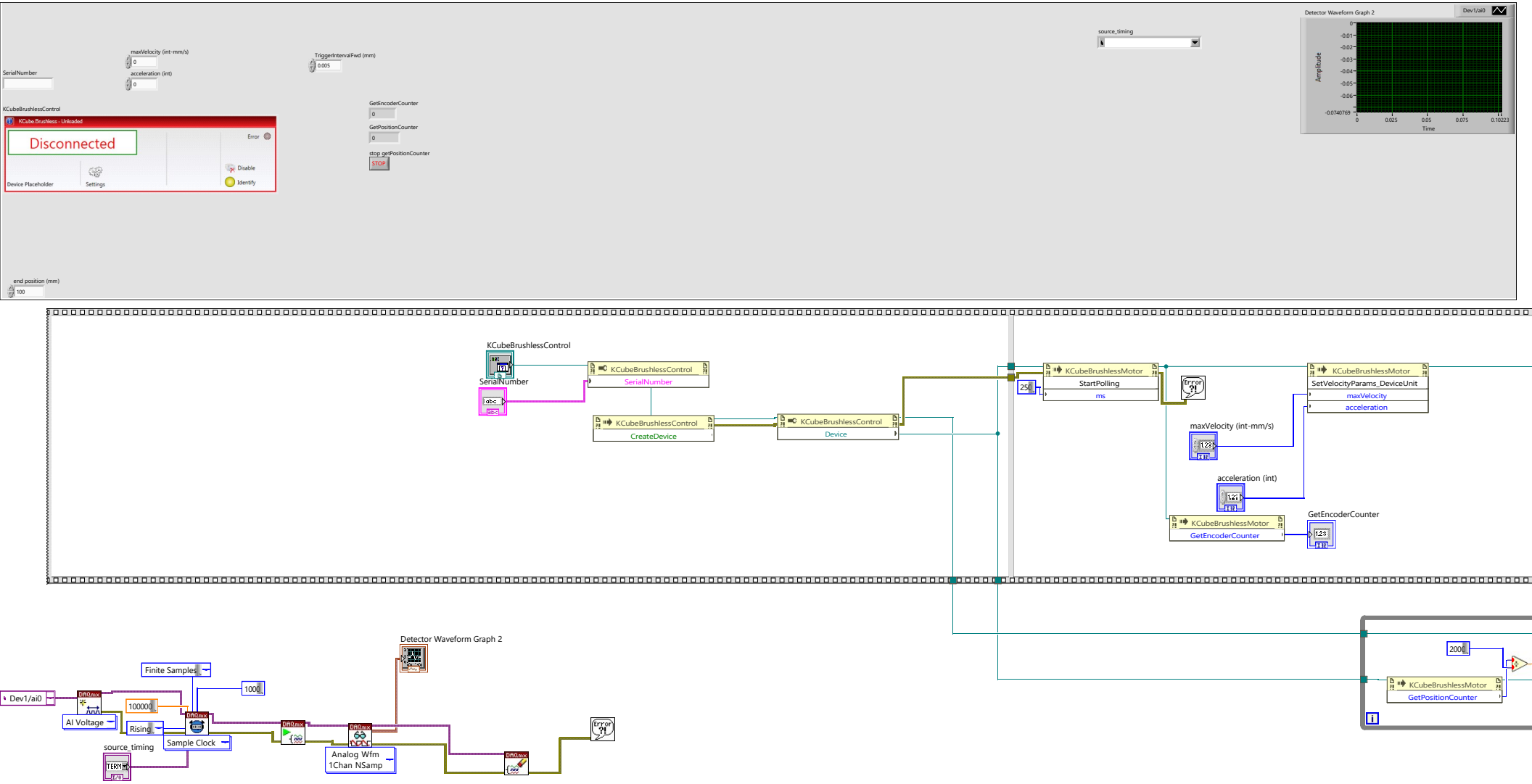
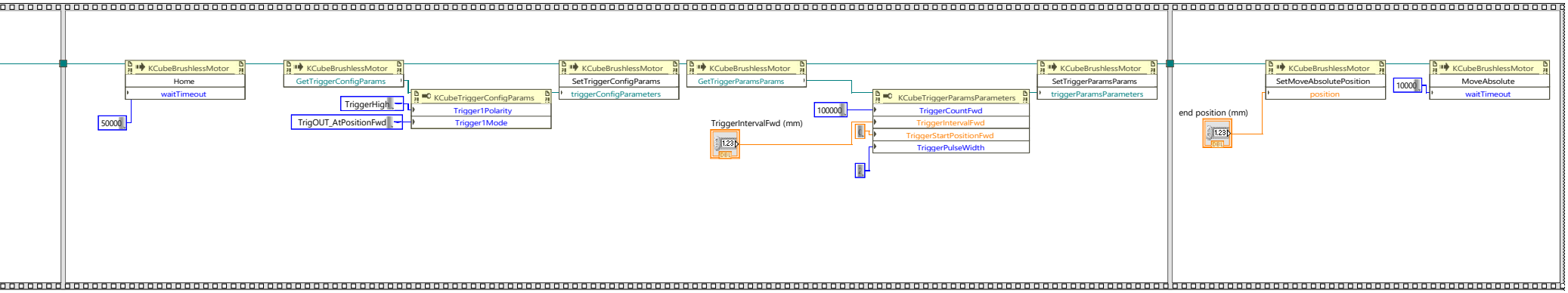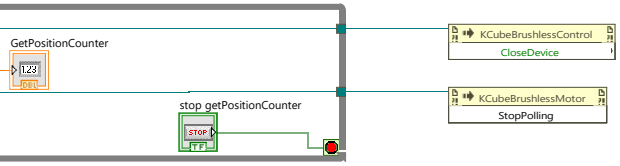
trigger_daq2.vi
D:\tuan\confocal\labview_kinesis\trigger_daq2.vi
Last modified on 4/27/2026 at 10:56 PM
Printed on 4/28/2026 at 9:57 AM