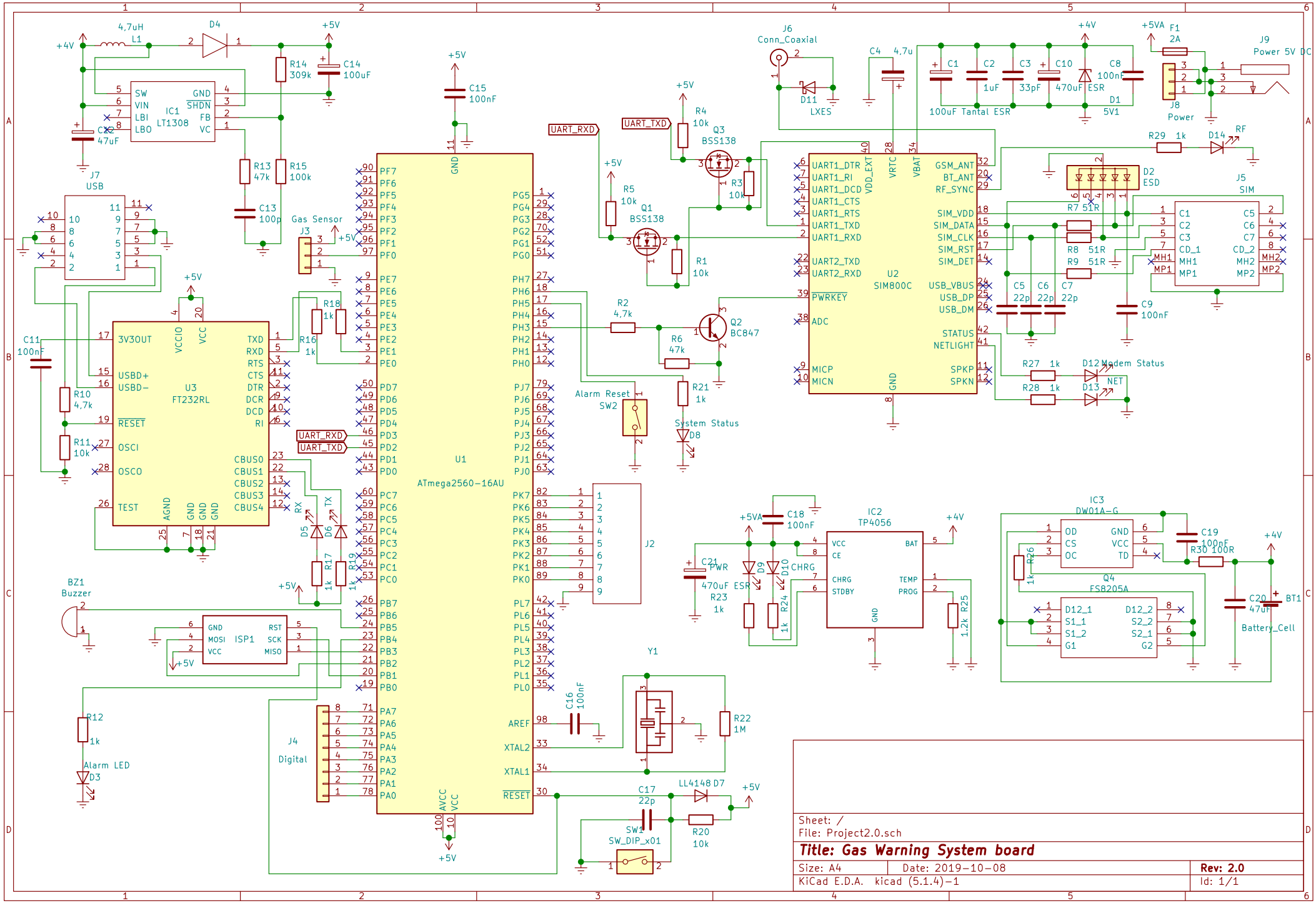
IC1
LT1308
SW
VIN
LBI
LBO
GND
SHDN
FB
VC
L1
4,7uH
D4
R14
309k
C14
100uF
C15
100nF
C2
47uF
R13
47k
R15
100k
C13
100p
J7
USB
J3
Gas Sensor
U3
FT232RL
3V3OUT
VCCIO
VCC
USBD+
USBD-
RESET
OSCI
OSCO
TEST
AGND
TXD
RXD
RTS
CTS
DTR
DCR
DCD
RI
CBUS0
CBUS1
CBUS2
CBUS3
CBUS4
C11
100nF
R10
4,7k
R11
10k
R18
1k
R16
1k
D5
D6
RX
TX
R17
1k
R19
1k
BZ1
Buzzer
ISP1
RST
SCK
MISO
MOSI
R12
1k
Alarm LED
D3
J4
Digital
U1
ATmega2560-16AU
PF7
PF6
PF5
PF4
PF3
PF2
PF1
PF0
PE7
PE6
PE5
PE4
PE3
PE2
PE1
PE0
PD7
PD6
PD5
PD4
PD3
PD2
PD1
PD0
PC7
PC6
PC5
PC4
PC3
PC2
PC1
PC0
PB7
PB6
PB5
PB4
PB3
PB2
PB1
PB0
PA7
PA6
PA5
PA4
PA3
PA2
PA1
PA0
PG5
PG4
PG3
PG2
PG1
PG0
PH7
PH6
PH5
PH4
PH3
PH2
PH1
PH0
PJ7
PJ6
PJ5
PJ4
PJ3
PJ2
PJ1
PJ0
PK7
PK6
PK5
PK4
PK3
PK2
PK1
PK0
PL7
PL6
PL5
PL4
PL3
PL2
PL1
PL0
AREF
XTAL2
XTAL1
RESET
AVCC
VCC
GND
J2
UART_RXD
UART_TXD
R4
10k
Q3
BSS138
R3
10k
R5
10k
Q1
BSS138
R1
10k
R2
4,7k
Q2
BC847
R6
47k
R21
1k
Alarm Reset
SW2
System Status
D8
C16
100nF
Y1
R22
1M
C17
22p
LL4148 D7
R20
10k
SW1
SW_DIP_x01
J6
Conn_Coaxial
D11
LXES
C4
4,7u
C1
100uF Tantal ESR
C2
1uF
C3
33pF
C10
470uF ESR
C8
100nF
D1
5V1
F1
2A
J9
Power 5V DC
J8
Power
R29
1k
D14
RF
D2
ESD
J5
SIM
U2
SIM800C
UART1_DTR
UART1_RI
UART1_DCD
UART1_CTS
UART1_RTS
UART1_TXD
UART1_RXD
UART2_TXD
UART2_RXD
PWRKEY
ADC
MICP
MICN
VDD_EXT
VRTC
VBAT
GSM_ANT
BT_ANT
RF_SYNC
SIM_VDD
SIM_DATA
SIM_CLK
SIM_RST
SIM_DET
USB_VBUS
USB_DP
USB_DM
STATUS
NETLIGHT
SPKP
SPKN
R7 51R
R8 51R
R9 51R
C5
22p
C6
22p
C7
22p
C9
100nF
R27
1k
D12 Modem Status
R28
1k
D13
NET
IC2
TP4056
VCC
CE
CHRG
STDBY
BAT
TEMP
PROG
GND
C18
100nF
C21
PWR
470uF ESR
R23
1k
D9
D10
CHRG
R24
1k
R25
1.2k
IC3
DW01A-G
OD
CS
OC
GND
VCC
TD
C19
100nF
R30 100R
R26
1k
Q4
FS8205A
D12_1
S1_1
S1_2
G1
D12_2
S2_2
S2_1
G2
C20
47uF
BT1
Battery_Cell
Sheet: /
File: Project2.0.sch
Title: Gas Warning System board
Size: A4
Date: 2019-10-08
Rev: 2.0
KiCad E.D.A. kicad (5.1.4)-1
Id: 1/1