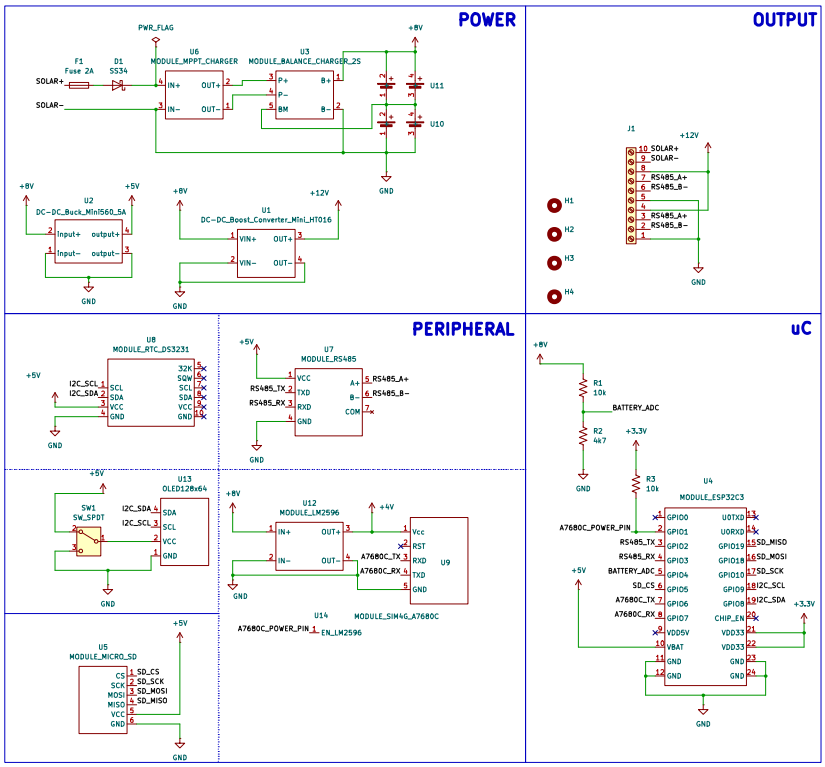
POWER
PWR_FLAG
+8V
F1
Fuse 2A
D1
SS34
SOLAR+
SOLAR−
U6
MODULE_MPPT_CHARGER
IN+
OUT+
IN−
OUT−
U3
MODULE_BALANCE_CHARGER_2S
P+
P−
BM
B+
B−
U11
U10
GND
U2
DC−DC_Buck_Mini560_5A
Input+
output+
Input−
output−
+5V
U1
DC−DC_Boost_Converter_Mini_HT016
VIN+
OUT+
VIN−
OUT−
+12V
OUTPUT
J1
10 SOLAR+
9 SOLAR−
8
7 RS485_A+
6 RS485_B−
5
4
3 RS485_A+
2 RS485_B−
1
H1
H2
H3
H4
PERIPHERAL
U8
MODULE_RTC_DS3231
32K
SQW
SCL
SDA
VCC
GND
I2C_SCL
I2C_SDA
U7
MODULE_RS485
VCC
TXD
RXD
GND
A+
B−
COM
RS485_TX
RS485_RX
RS485_A+
RS485_B−
U13
OLED128x64
SDA
SCL
VCC
GND
SW1
SW_SPDT
U12
MODULE_LM2596
IN+
OUT+
IN−
OUT−
+4V
U9
Vcc
RST
RXD
TXD
GND
A7680C_TX
A7680C_RX
U14
MODULE_SIM4G_A7680C
A7680C_POWER_PIN
EN_LM2596
U5
MODULE_MICRO_SD
CS
SCK
MOSI
MISO
VCC
GND
SD_CS
SD_SCK
SD_MOSI
SD_MISO
uC
R1
10k
BATTERY_ADC
R2
4k7
R3
10k
+3.3V
U4
MODULE_ESP32C3
GPIO0
GPIO1
GPIO2
GPIO3
GPIO4
GPIO5
GPIO6
GPIO7
VDD5V
VBAT
GND
U0TXD
U0RXD
GPIO19
GPIO18
GPIO10
GPIO9
GPIO8
CHIP_EN
VDD33
GND
A7680C_POWER_PIN
RS485_TX
RS485_RX
BATTERY_ADC
SD_CS
A7680C_TX
A7680C_RX
SD_MISO
SD_MOSI
SD_SCK
I2C_SCL
I2C_SDA