Power Delivery

File: power_delivery.kicad_sch

Microcontroller

File: microcontroller.kicad_sch

Stepper Drivers

File: stepper_drivers.kicad_sch

IO Connectors

File: io_connectors.kicad_sch

Sheet: /
File: drawbot.kicad_sch

Title:

Size: A4	Date:	**Rev:**
KiCad E.D.A. 9.0.7		Id: 1/5

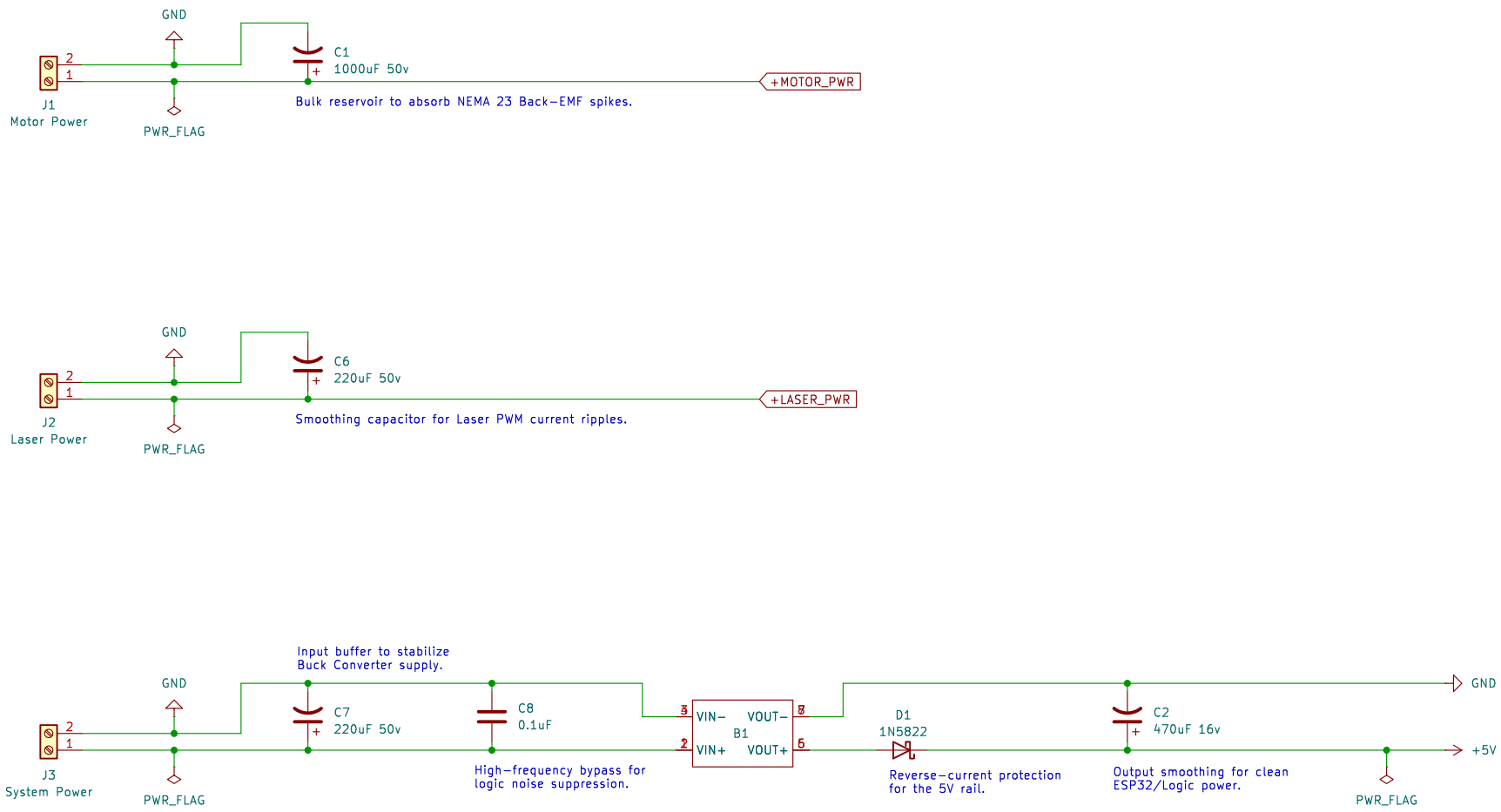

All three screw terminals lead back
to the same 24V 10A power supply.

Sheet: /Power Delivery/
File: power_delivery.kicad_sch

Title:

Size: A4	Date:	Rev:
KiCad E.D.A. 9.0.7		Id: 2/5

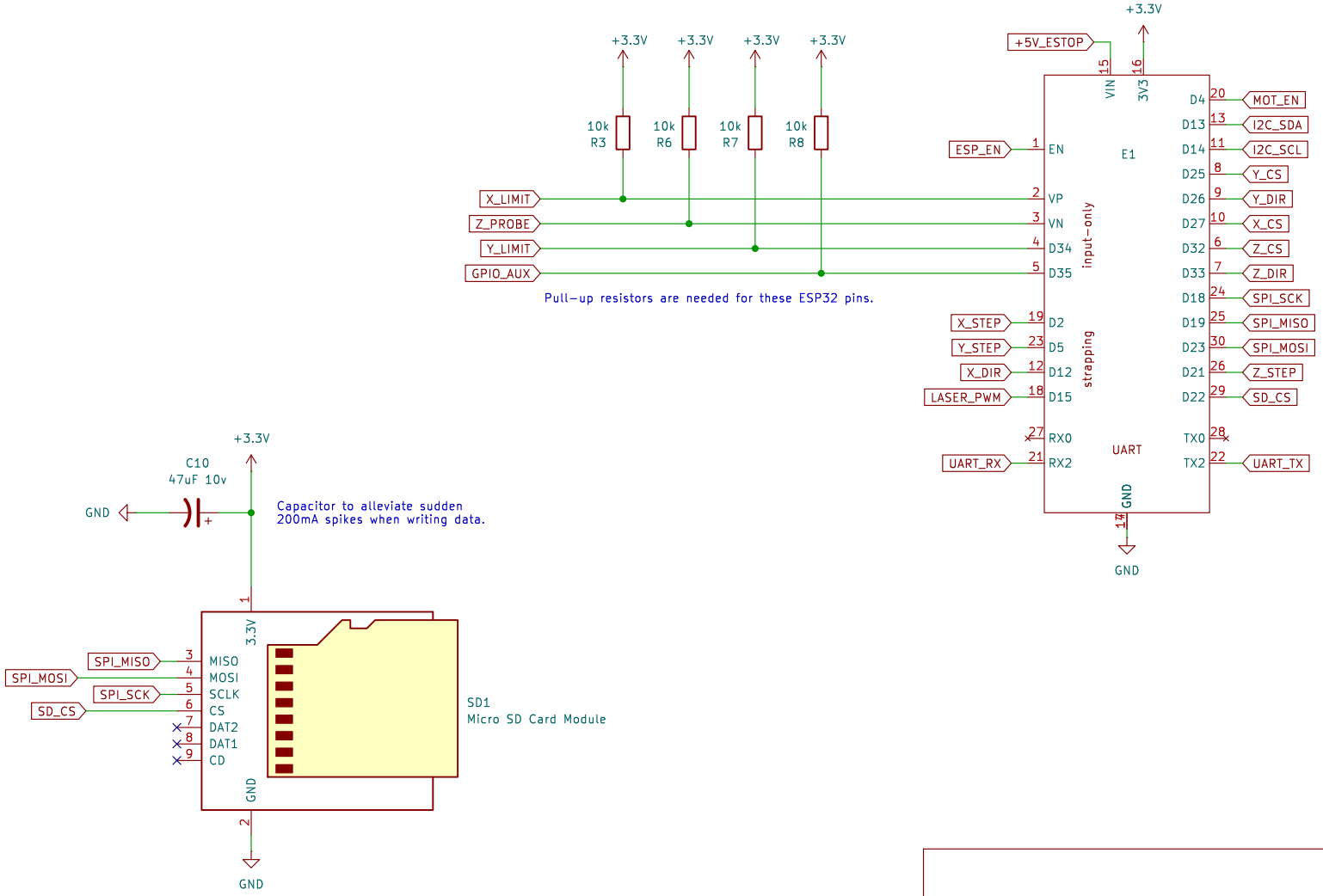

Sheet: /Microcontroller/
File: microcontroller.kicad_sch

Title:

Size: A4	Date:	Rev:
KiCad E.D.A. 9.0.7		Id: 3/5

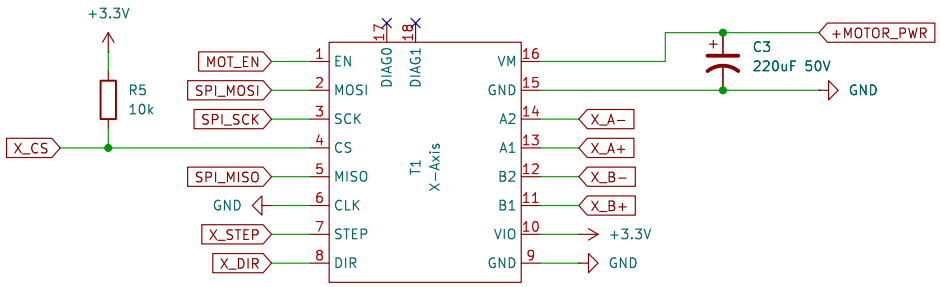

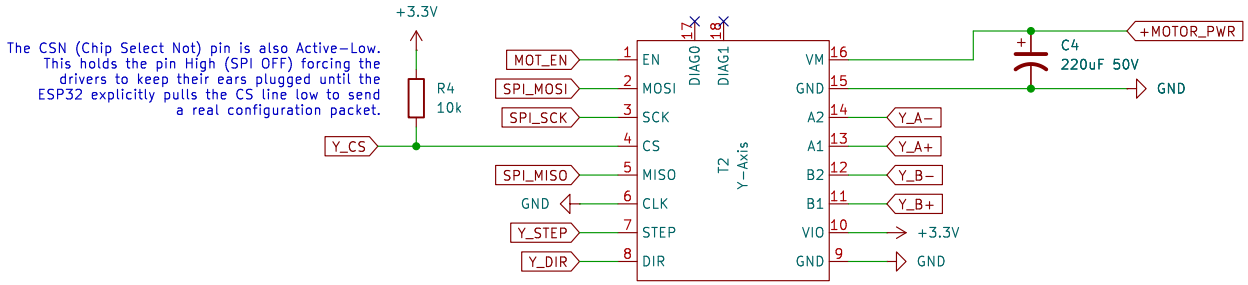

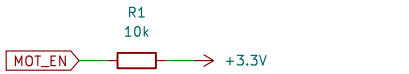

The EN (Enable) pin on the TMC5160 is Active-Low.
This holds the pin High (Motors OFF) while the ESP32
wakes up. Once the ESP32 is ready to move, it easily
overpowers the resistor and pulls the line Low.

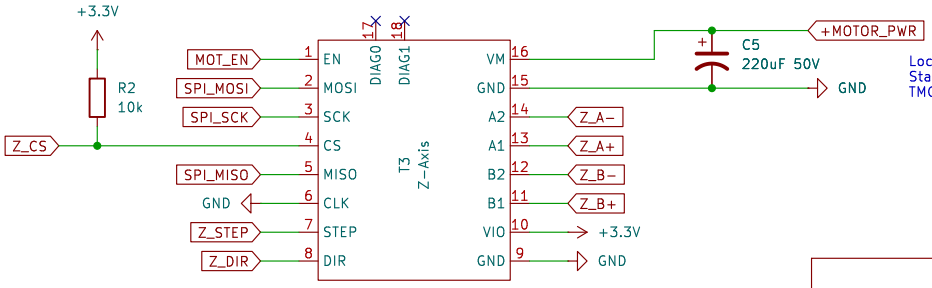

Local energy reservoir and Back-EMF snubber.
Stabilizes VMOT during high-current steps and protects
TMC5160 from voltage spikes during motor deceleration.

Sheet: /Stepper Drivers/
File: stepper_drivers.kicad_sch

Title:

Size: A4	Date:	**Rev:**
KiCad E.D.A. 9.0.7		Id: 4/5

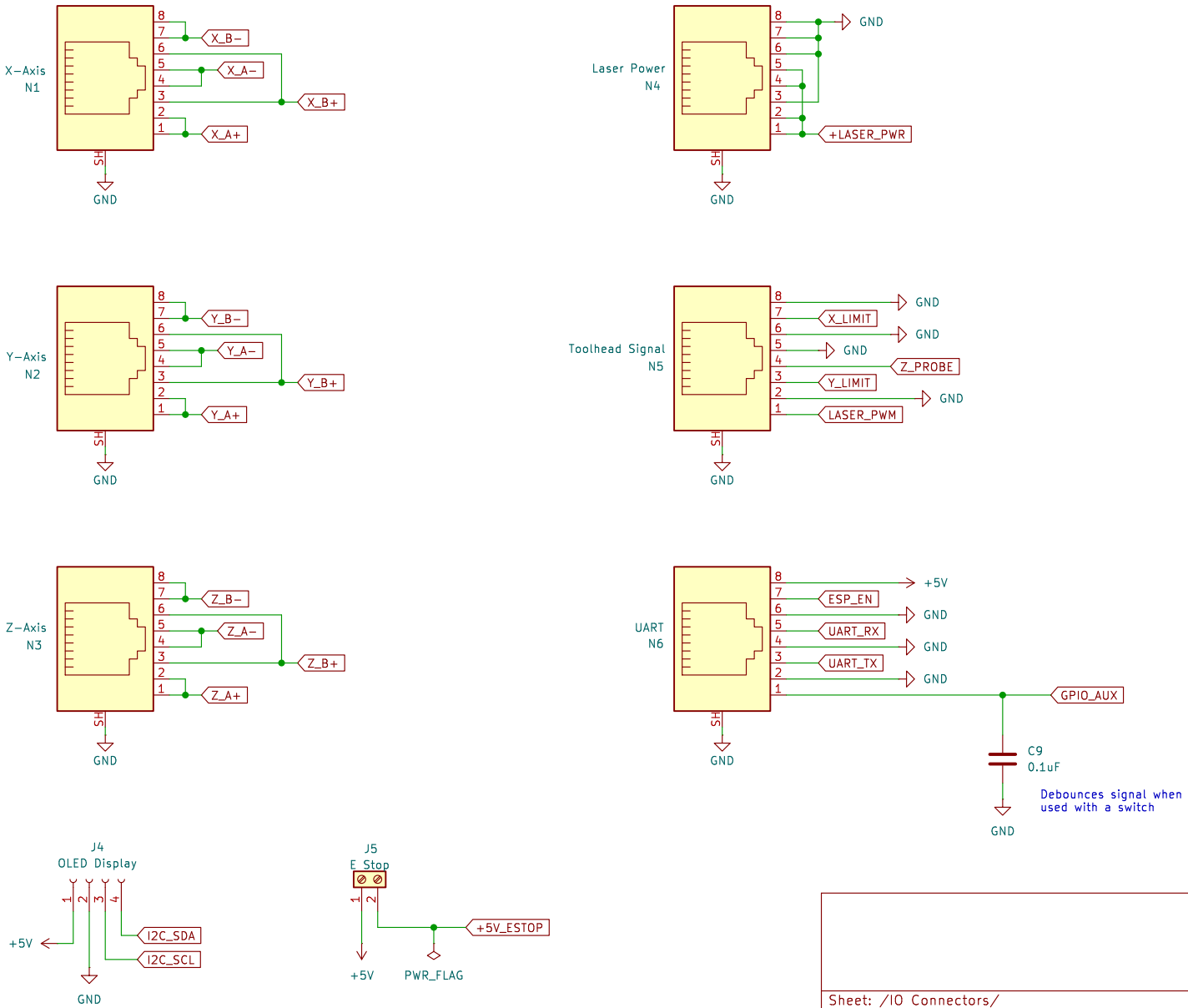

Sheet: /IO Connectors/
File: io_connectors.kicad_sch

Title:

Size: A4	Date:	Rev:
KiCad E.D.A. 9.0.7		Id: 5/5