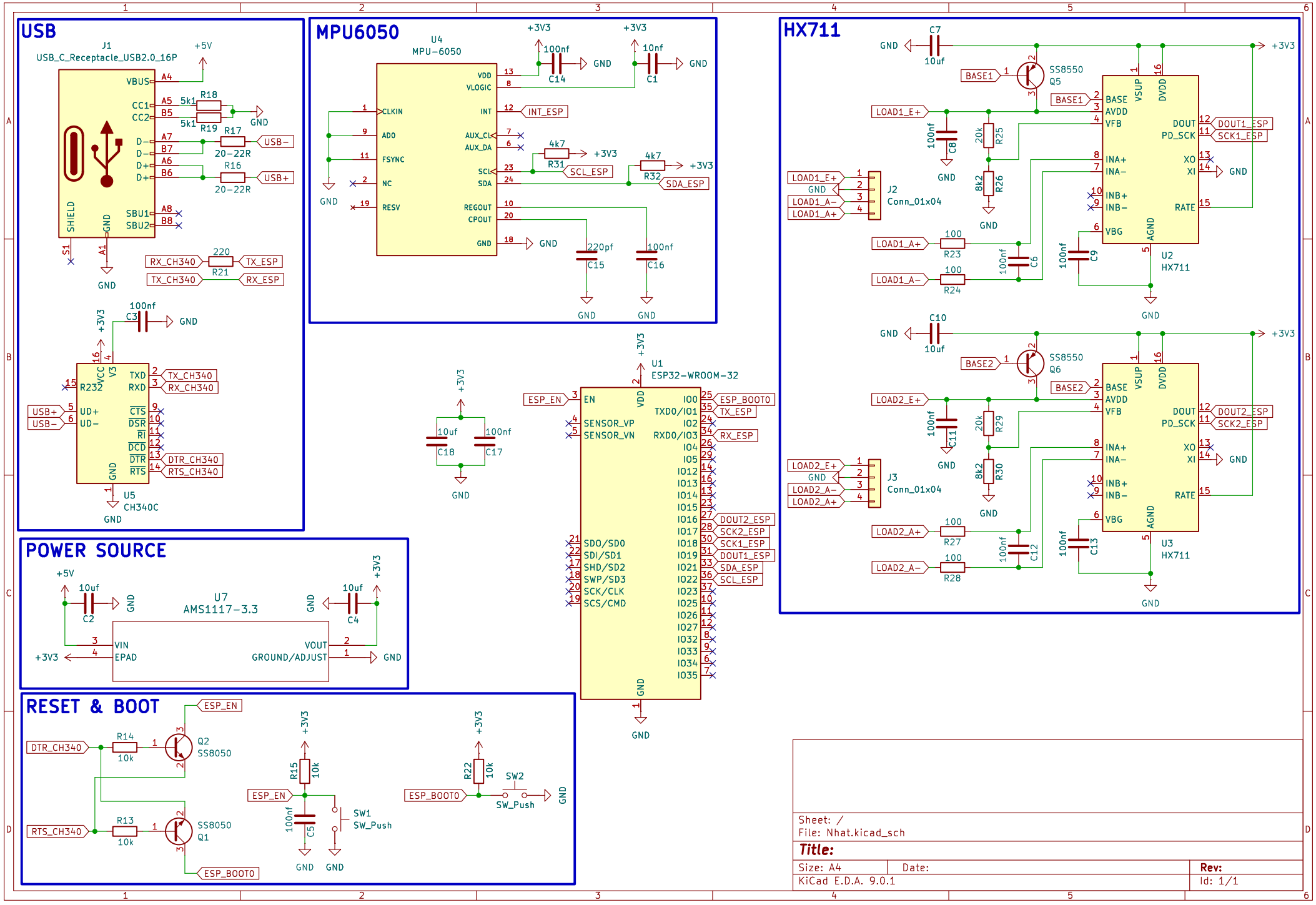
USB
J1
USB_C_Receptacle_USB2.0_16P
+5V
VBUS
CC1
CC2
D−
D+
SHIELD
GND
R18
R19
5k1
R17
R16
20−22R
USB−
USB+
RX_CH340
TX_CH340
R21
220
TX_ESP
RX_ESP
100nf
C3
R232
VCC
V3
TXD
RXD
UD+
UD−
CTS
DSR
RI
DCD
DTR
RTS
DTR_CH340
RTS_CH340
U5
CH340C
MPU6050
U4
MPU−6050
VDD
VLOGIC
CLKIN
INT
ADO
AUX_CL
AUX_DA
FSYNC
SCL
SDA
NC
RESV
REGOUT
CPOUT
INT_ESP
SCL_ESP
SDA_ESP
4k7
R31
R32
C14
C1
C15
C16
220pf
10nf
HX711
C7
C10
10uf
SS8550
Q5
Q6
BASE1
BASE2
LOAD1_E+
LOAD1_A−
LOAD1_A+
LOAD2_E+
LOAD2_A−
LOAD2_A+
J2
J3
Conn_01x04
100nf
C8
C11
20k
R25
R29
8k2
R26
R30
100
R23
R24
R27
R28
C6
C12
C9
C13
VSUP
DVDD
BASE
AVDD
VFB
INA+
INA−
INB+
INB−
VBG
AGND
DOUT
PD_SCK
XO
XI
RATE
DOUT1_ESP
SCK1_ESP
DOUT2_ESP
SCK2_ESP
U2
U3
HX711
POWER SOURCE
U7
AMS1117−3.3
VIN
EPAD
VOUT
GROUND/ADJUST
C2
C4
10uf
RESET & BOOT
ESP_EN
DTR_CH340
RTS_CH340
R14
R13
10k
Q2
SS8050
Q1
R15
R22
C5
SW1
SW2
SW_Push
ESP_BOOT0
U1
ESP32−WROOM−32
EN
SENSOR_VP
SENSOR_VN
SDO/SD0
SDI/SD1
SHD/SD2
SWP/SD3
SCK/CLK
SCS/CMD
IO0
TXD0/IO1
IO2
RXD0/IO3
IO4
IO5
IO12
IO13
IO14
IO15
IO16
IO17
IO18
IO19
IO21
IO22
IO23
IO25
IO26
IO27
IO32
IO33
IO34
IO35
ESP_BOOT0
TX_ESP
RX_ESP
DOUT2_ESP
SCK2_ESP
SCK1_ESP
DOUT1_ESP
SDA_ESP
SCL_ESP
10uf
C18
100nf
C17
Sheet: /
File: Nhat.kicad_sch
Title:
Size: A4
Date:
Rev:
KiCad E.D.A. 9.0.1
Id: 1/1