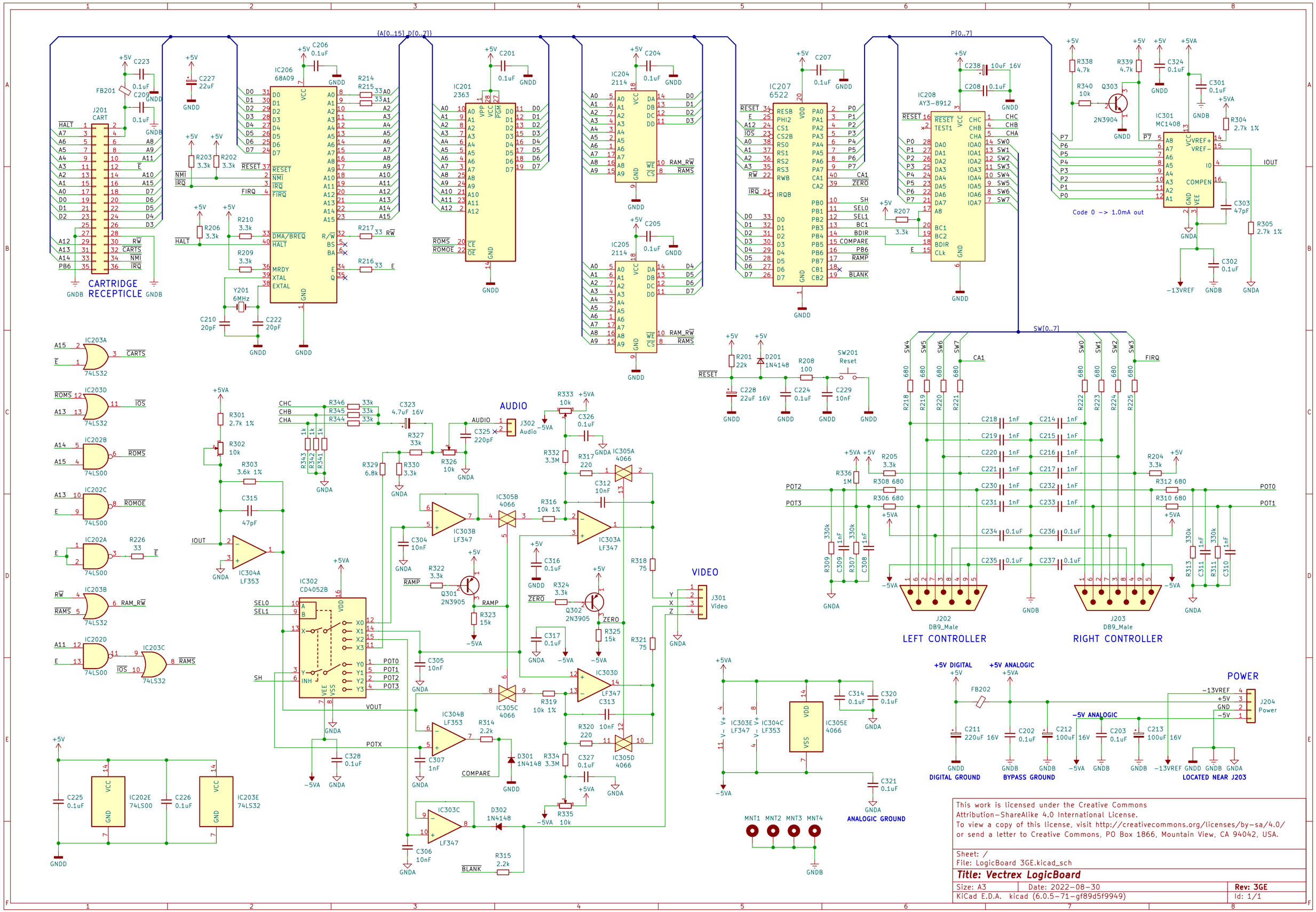

This work is licensed under the Creative Commons
Attribution-ShareAlike 4.0 International License.
To view a copy of this license, visit http://creativecommons.org/licenses/by-sa/4.0/
or send a letter to Creative Commons, PO Box 1866, Mountain View, CA 94042, USA.

Sheet: /
File: LogicBoard 3GE.kicad_sch

Title: Vectrex LogicBoard

Size: A3	Date: 2022-08-30	Rev: 3GE
KiCad E.D.A. kicad (6.0.5-71-gf89d5f9949)		Id: 1/1