Buffers VBUS CC pull-up to VCC logic: https://tinyurl.com/2drtzrez
If using stronger pull-ups then spec, this could be simplified. Remember VBUS level needs to be buffered to VCC somehow.

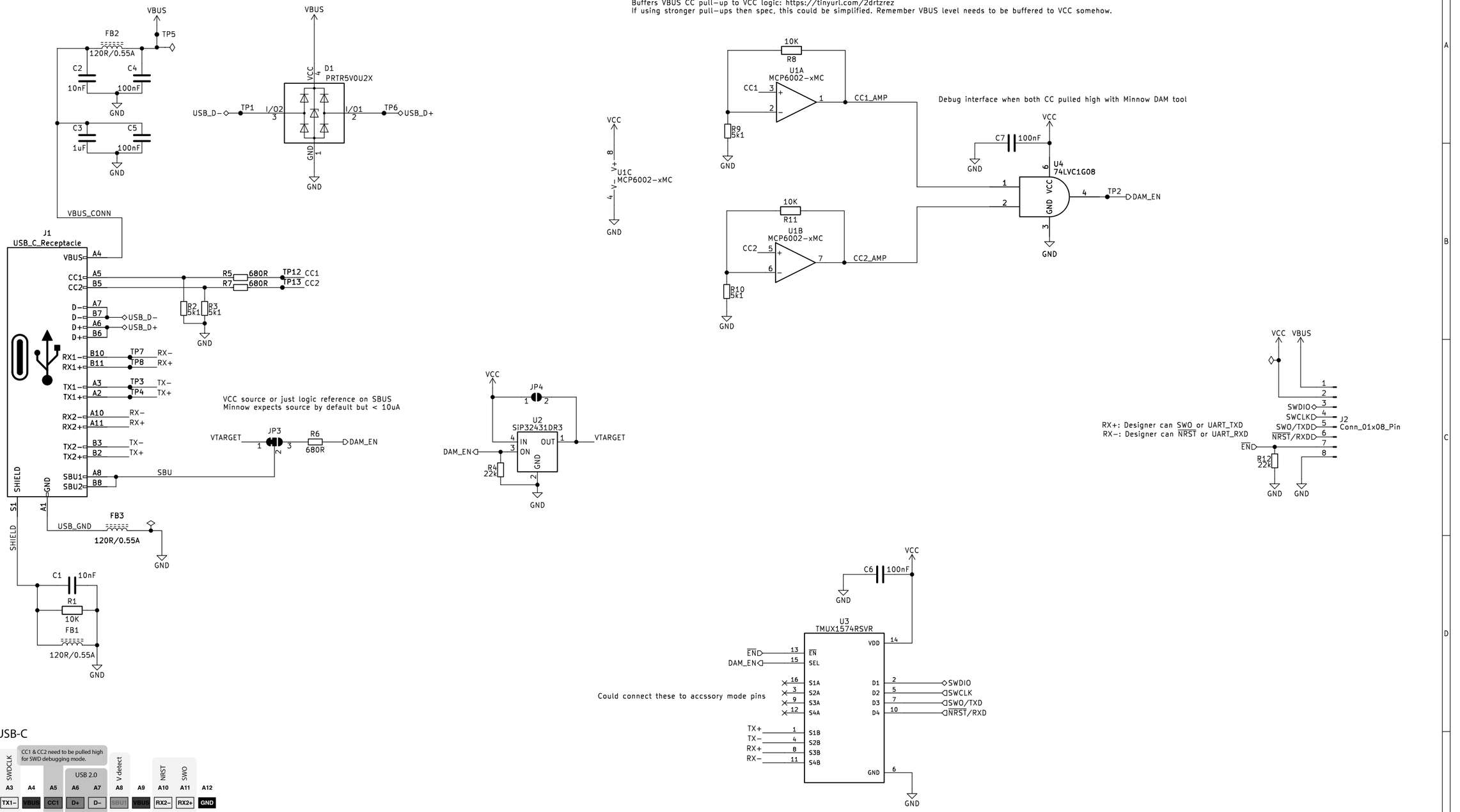

SWD over USB-C

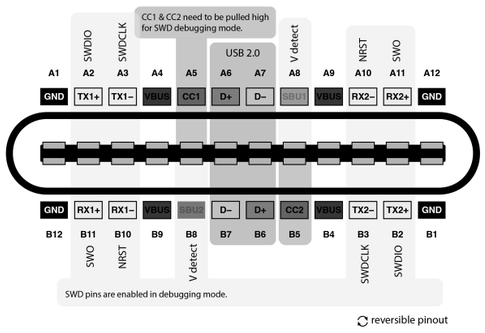

Ref: https://github.com/BitterAndReal/SWD-over-USB-C

Adapted so that RX1/2 can be switched between NRST/SWO and RXD/TXD

Based on https://github.com/BitterAndReal/SWD-over-USB-C/blob/main/Schematic_DAM_detection.p
J.Whittington 2023
JBR Engineering Research Ltd

Sheet: /
File: usb-dam.kicad_sch

Title: SWD over DAM (Debug Accessory Mode) Example Board

Size: A3	Date: 2023-05-16	**Rev: 1**
KiCad E.D.A. kicad 7.0.6-0		Id: 1/1