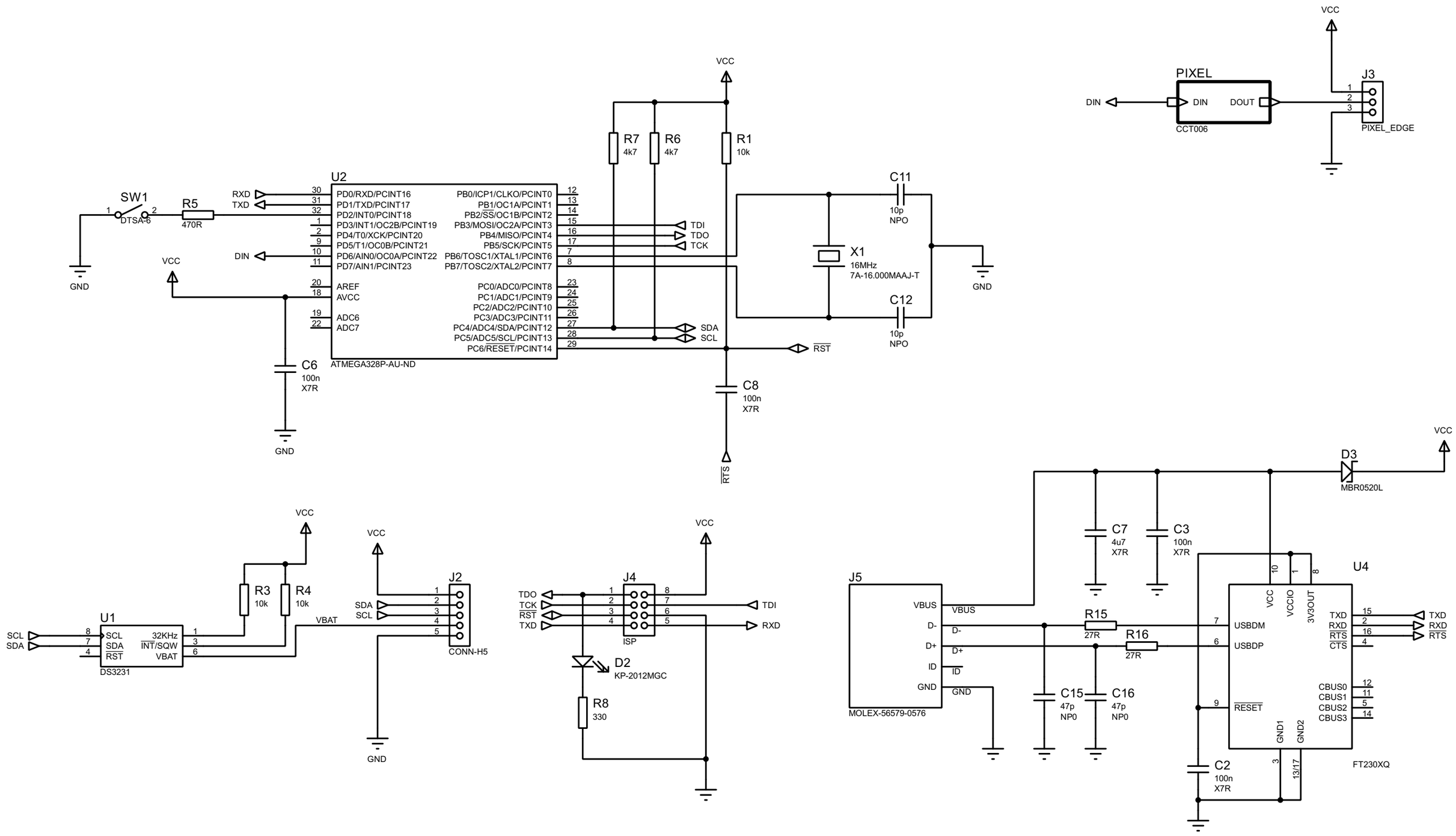

FILE NAME: wooden-bits.pdsprj	DATE: 19/04/2017
DESIGN TITLE: wooden-bits.pdsprj	PAGE: 1 of 2
PATH: C:\Users\JWhittington\Dropbox (Personal)\Projects\JBR-Engineering	
BY: @AUTHOR REV:@REV	TIME: 15:21:07