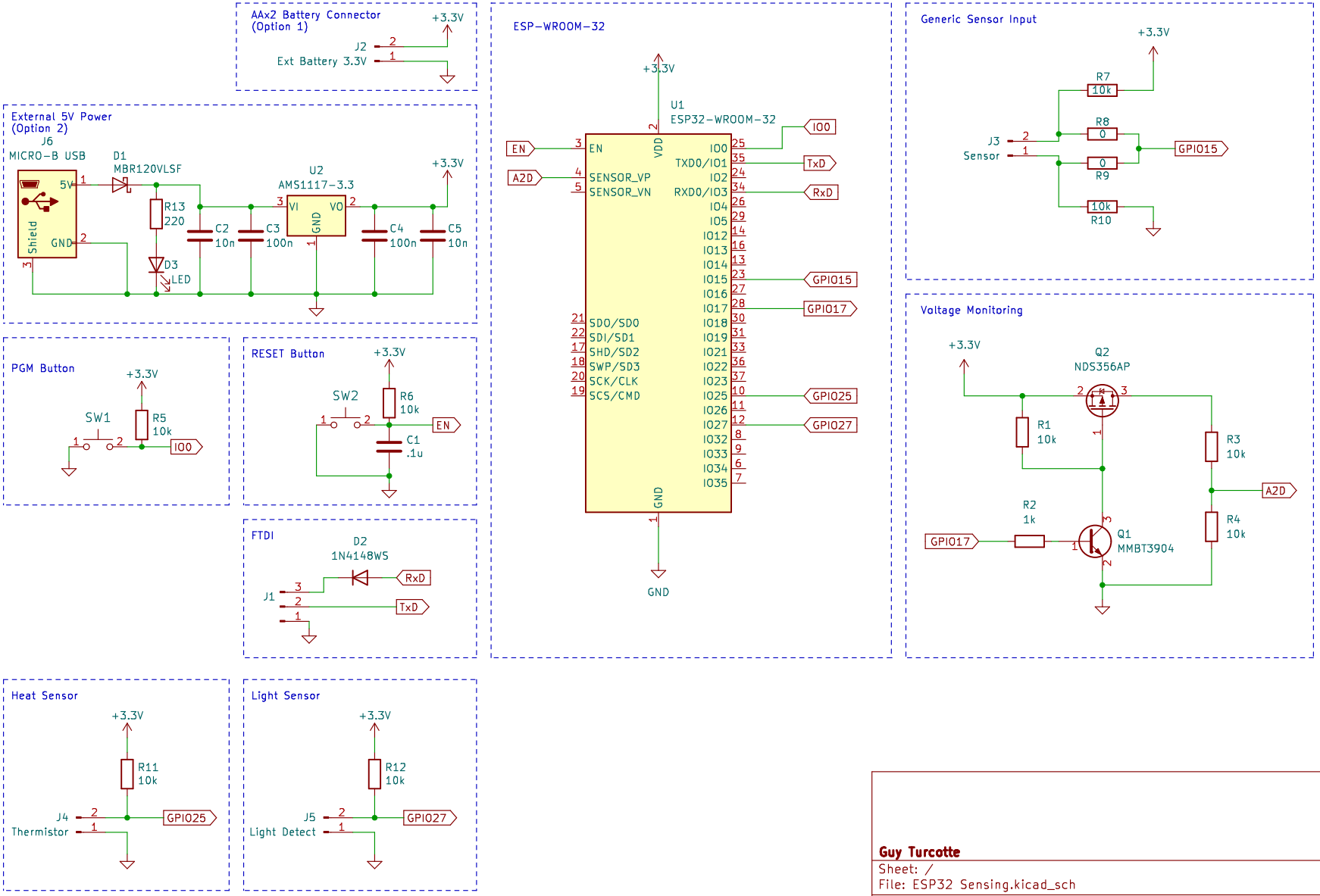

Guy Turcotte

Sheet: /

File: ESP32 Sensing.kicad_sch

Title: ESP32 Sensing Device

Size: A4	Date: 2022-03-23	**Rev: 1.0**
KiCad E.D.A. kicad 6.0.4-6f826c9f35~116~ubuntu20.04.1		Id: 1/1