International Conference on Communication and Signal Processing, April 6-8, 2017, India

Design of Reconfigurable LFSR for VLSI IC Testing in ASIC and FPGA

Devika K N and Ramesh Bhakthavatchalu

***Abstract*—This paper focus on the design of a reconfigurable Linear Feedback Shift Register (LFSR) for Very Large Scale Integration (VLSI) Integrated Circuit (IC) testing. The advancement in VLSI technology have made chip testing more complicated which has lead to the popularity of Logic Built In Self Test(LBIST) compared to Automatic Test Equipment(ATE). Logic BIST allows in-built chip testing with the help of an additional hardware structure inside the circuit. The test patterns are not applied by ATE but are generated by inbuilt testing circuits. Thus it reduces testing costs considerably. LFSR is commonly used as a test pattern generator since it is more efficient than binary counters. Reconfigurable LFSR can be used as the test pattern generator inside Logic BIST to improve the fault coverage of IC testing. As per requirement it can be configured to generate maximum length sequence or any length patterns depending on the feedback polynomial provided. It increases the random patterns generated that are applied as test vectors. The proposed LFSR architecture is simulated in Modelsim RTL simulator. The different sized (16, 32, 64) programmable LFSR structures is synthesized in Xilinx Spartan 3E for implementing LFSR on FPGA. Four structural representations such as Modular, Standard, Hybrid and Complete LFSR are implemented. All the designs are synthesized for ASIC in RTL compiler using 90nm standard cell technology library. The results of the proposed programmable designs are analyzed for speed, power and area.**

***Index Terms*—PRPG, Reconfigurable LFSR, primitive polynomial, FPGA, ASIC**

I. INTRODUCTION

THE ever increasing complexity of IC designs has made the testing of VLSI chips more difficult and cumbersome. Due to the advancement in manufacturing technologies it has become extremely important and difficult to test the VLSI chips for commonly occurring faults such as stuck at faults and bridging faults. This lead to the development of a new testing technology called Logic Built in Self-Test.

To ensure safety and durability, infield testing should be Logic BIST is an inbuilt testing circuitry that tests the structural integrity or quality of the chip after manufacturing.

Logic BIST design includes on-chip/board circuitry to provide test patterns and to analyze output responses. It can perform the test internal to the chip so that the need for complex external testing equipment is greatly reduced. It not only reduces the cost of testing but also allows rapid testing of the circuit [1]. It guarantees complete fault coverage at the cost of area occupancy of about 15% overall chip area. In Logic BIST architecture PRPG act as the test pattern generator and MISR acts as the output response analyzer. Test patterns generated by PRPG are fed as inputs to the circuit under test. The corresponding outputs from MISR is compared with the expected outputs (Golden signature) using a comparator to check whether the circuit is faulty or fault-free [2],[3]. Alternating Variable Run-length (AVR) code scheme is used for test data reduction in LFSR [4].

The critical components in Logic BIST comprises of a Pseudo Random Pattern Generator (PRPG) and Multiple Input Shift Register (MISR). Pseudo Random Pattern Generator is implemented using an LFSR which generates random test patterns that are applied to the circuit to be tested [5],[6]. LFSR structure mainly includes flip-flops, XOR gates and multiplexers that make it reconfigurable. It is a shift register whose input bit to LSB flipflop is a linear function of previous states of other flipflops. XOR gates provide the linear functionality. Many research work have been done to make LFSR reconfigurable [7]-[8]-[9]. Most common application of LFSR is in Logic BIST architectures as test pattern generators [10]. One of the approaches adds reconfigurability to the design by relying on multiplexers [11]. But it adds to circuit complexity since the proposed technique demands the requirement of n-1 XOR gates for n-bit LFSR even if the feedback polynomial demands less number of taps. Another paper designs n-bit LFSR over GF(2^p) by converting it into equivalent logic over GF (2) but with a higher order size [13].There are a wide variety of applications of LFSR[12],[14],[15]. It is being used as the key stream generators in cryptographic field for the past few decades [16].

In this paper an n-bit reconfigurable LFSR that generates sequences of maximum length or less has been designed and implemented. The proposed design provides flexibility in terms of both, feedback polynomial and size of LFSR.

Devika K N and Ramesh Bhakthavatchalu are with Department of Electronics and Communication Engineering, Amrita School of Engineering, Amritapuri, Amrita Vishwa Vidyapeetham, Amrita University, India.(e-mail: devikanandalal@gmail.com, rameshb@am.amrita.edu).

978-1-5090-3800-8/17/$31.00 ©2017 IEEE

Authorized licensed use limited to: POLO BIBLIOTECARIO DI INGEGNERIA. Downloaded on March 24,2026 at 08:40:10 UTC from IEEE Xplore. Restrictions apply.

The design inserts XOR gates only at required positions contributed by the primitive or non-primitive polynomials. Muliplexers are added to the structure to load the initial values into the LFSR design. It is simulated and synthesized using

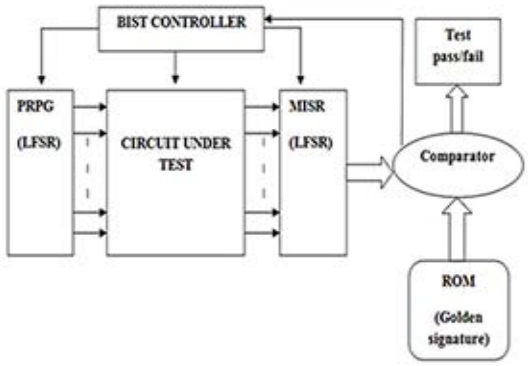

Fig. 1.Typical LFSR architecture

verilog on the Xilinx Spartan 3E for implementation in FPGA nd in Encounter RTL compiler for implementation in ASIC [17]. Reconfigurable LFSR is designed in its different forms to study and compare their performance to determine the efficient configuration.

The structure of the paper proceeds as follows: Section II describes the architecture of LFSR and its different types. Section III discusses how programmable LFSR is implemented. Section IV shows the simulation and synthesis results of 16, 32 and 64 bit LFSR in Xilinx and RTL compiler. Section V concludes the paper and discusses future scope in this field.

II. Architecture of LFSR

LFSR is basically a shift register where each clock signal advances the data from one register to another [18]. Here some bits of the shift register are XORed to form a linear feedback to drive the input bit of LFSR. Taps are those selected bits of the previous states that influence the input bit. A chain of such taps depending on the feedback polynomial is XORed to form the feedback loop. Characteristic polynomial of degree n over GF (2) defines the internal structure of an n-bit LFSR where coefficients hi denote the existence of feedback path.

Characteristic polynomial is given by m(x) [18]

$$m(x) = 1 + h_1x + h_2x^2 + :::::::h_{n\ \ 1}x^{n\ \ 1} + h_nx^n \qquad (1)$$

LFSR can generate different pseudo random sequences based on the feedback polynomial provided. The arithmetic operations in LFSR are done over finite field of polynomial mod 2.

This finite field is called Galois field denoted as GF (p) where p is the number of elements in the field. GF (2) is the binary field over which all the arithmetic operations are performed in LFSR. Therefore every addition operation is equivalent to XOR and every multiplication happens as AND operation. So the coefficients of the characteristic polynomials have either 0 or 1 as its value that indicates the presence or absence of tap position.

For example, in the feedback polynomial

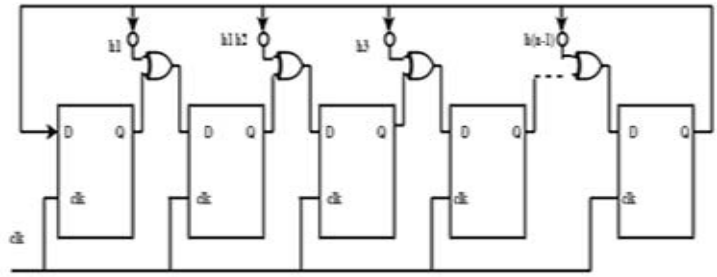

Fig. 2. N-bit Modular LFSR architecture

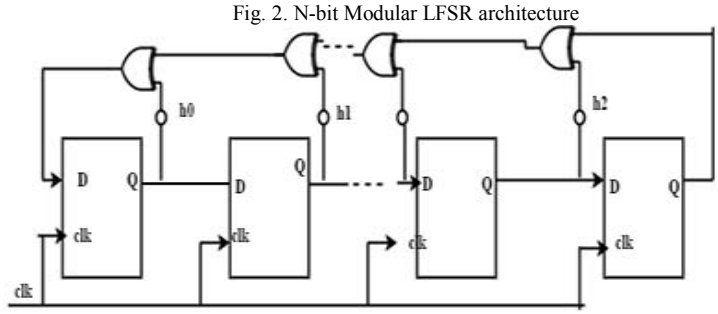

Fig. 3. N-bit Standard LFSR architecture

$$x^{16} + x^{14} + x^{13} + x^{11} + 1 \qquad (2)$$

The term, one represents the input to first flip-flop, and powers of x terms represents the tapped bits.

Those polynomials that could divide $1 + x^T$ completely but does not divide any other polynomials of the form $1 + x^i$ are called primitive polynomials, where i<1. The significance of primitive polynomials is that maximum length sequences of $T = 2^n - 1$ can be generated. So these polynomials are fed to LFSR in Logic BIST applications.

Due to the capability to generate random patterns and because of error detection and correction properties LFSR is commonly used to design the main components in LBIST architecture.

. Different types of LFSR includes, i) Standard LFSR ii) Modular LFSR iii) Complete LFSR iv) Hybrid LFSR

A. Standard LFSR

Standard LFSR also called as Fibonacci LFSR or external XOR LFSR is a shift register XOR gates representing the tap positions of the feedback polynomials are concatenated to produce a new output bit. This single bit output is given as feedback input to the last flipflop in the structure. Fig.3 shows an N-bit Standard LFSR

B. Modular LFSR

Modular LFSR called as galois, internal XORs, or one-to-many LFSR is another form LFSR generating the same patterns as that of conventional one. The only difference lies in the connection of taps in feedback polynomials to the

Authorized licensed use limited to: POLO BIBLIOTECARIO DI INGEGNERIA. Downloaded on March 24,2026 at 08:40:10 UTC from IEEE Xplore. Restrictions apply.

flipflops. The XOR gates are connected immediately after the flipflop depending on tap positions. The output of these gates

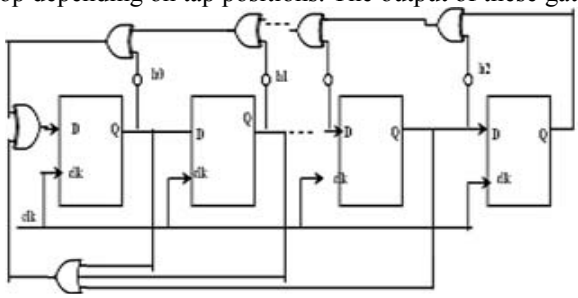

Fig. 4. Architecture of Complete LFSR

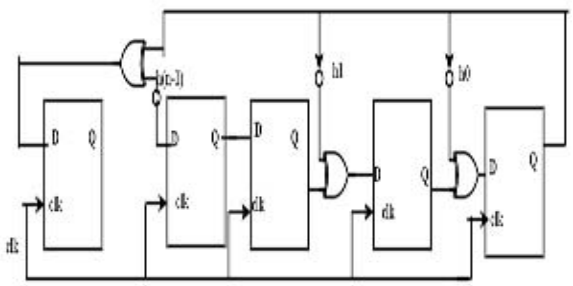

Fig. 5. Architecture of Hybrid LFSR

is fed to the immediate next flipflop. The advantage of this structure over the standard form is that the critical path contains a maximum of only one XOR gate in between the two flipflop compared to other where it includes all XOR gates as per the number of taps. So Modular LFSR is faster in terms of execution compared to the Standard one because XOR operations can be implemented a word at a time. Thus software implementation of galois LFSR is efficient. Fig. 2. shows an N-bit Modular LFSR.

C. Complete LFSR

All LFSR are designed to generate a maximum length sequence of upto 2n -1only. Complete form of architecture is shown in fig. 4. The presence of an all-zero sate can move LFSR into a locked-state condition. Modified form of LFSR that also include an all zero state is called complete LFSR. Complete LFSR can be constructed from standard LFSR by inserting an XOR gate into the last stage of the LFSR, and a NOR gate with n-1 inputs is used as a zero-detector. Thus a complete LFSR could generate 2n patterns for a primitive polynomial feedback LFSR [18].

D. Hybrid LFSR

A polynomial over GF (2) $f(x) = 1+ m(x) + q(x)$, be said to be fully decomposable if both m(x) and q(x) have no common terms and there exists an integer j such that $q(x) = x^j m(x)$, where j<1. Then the corresponding polynomial can be expressed as

$$f(x) = 1+m(x)+x^j\, m(x) \tag{3}$$

Then a (hybrid) top–bottom LFSR can be constructed using the connection polynomial:

$$p(x) = 1+\hat{}x^j + x^j\, m(x) \tag{4}$$

where $\hat{}x^j$ indicates that the XOR gate with one input taken from the jth stage output of the LFSR is connected to the feedback path and not between stages. Fig. 5 Shows the architecture of Hybrid LFSR. The advantage of Hybrid structure of LFSR compared to modular and standard form is that the number of XOR gates required can be reduced from 'm' XOR gates to (m-1)/2 in hybrid form. It makes use of a feedback structure from jth output stage. A modular structure is utilized from first to (j-1)th registers. So Hybrid LFSR is more efficient in terms of area, number of gates and speed.

III. Proposed LFSR Architecture

This paper presents the design of a simple reconfigurable LFSR. Normally LFSR generates $2^n - 1$ states if the give polynomial is primitive or less number of states if the entered polynomial is non-primitive. Programmable LFSR increases the randomness of the output. This LFSR uses D-flipflops, XOR gates and multiplexers. Fig. 6.shows the proposed architecture of LFSR. XOR gates are inserted between the flipflops depending on the value of chain which represents the required polynomial in the design. The choice of taps determines how many values of PN sequence is there before repetition. That gives the cycle PN sequence. Presence of multiplexers in the structure makes LFSR reconfigurable. The select signal decides whether to load the flipflops or to shift the values in the register. Initial value is loaded into the LFSR if the select signal is zero. In the other case it does the shifting operation according to the feedback polynomial provided. The length of the LFSR designed is also made programmable to have an n-bit LFSR.

In this paper standard, modular, complete as well as hybrid LFSR's are made to be programmable. Complete LFSR uses the same design as that of standard LFSR, except that a additional circuitry is added. This circuitry consists of a NOR gate which takes in all the flipflop output as inputs and pass it to an XOR gate. XOR gate also takes in the value coming form the feedback path of standard LFSR.The output of this XOR gate is given as feedback in the reconfigurable LFSR. By doing so LFSR can generate all 2n exhaustive patterns improving the fault coverage. In top-bottom hybrid LFSR design number of XOR gates is reduced using both standard and modular configurations in the design.

IV. Simulation and Synthesis Results

The proposed design of LFSR is described in verilog HDL, simulated in Modelsim 6.5 RTL simulator and Xilinx ISE is the software tool used for synthesis in FPGA. Encounter RTL compiler is the EDA tool used for the synthesis of the design in ASIC.

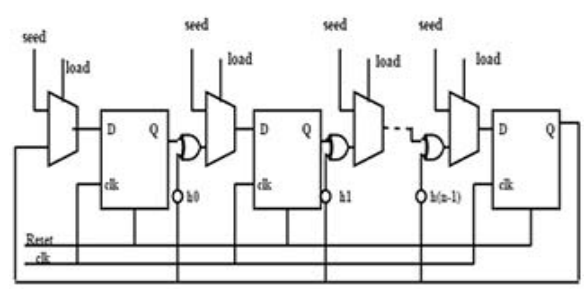

Fig. 6. Proposed architecture of LFSR

Authorized licensed use limited to: POLO BIBLIOTECARIO DI INGEGNERIA. Downloaded on March 24,2026 at 08:40:10 UTC from IEEE Xplore. Restrictions apply.

A. Simulation results

The figure below shows the result after simulation of 16 bit standard LFSR generating 65535 patterns. The clock period applied is of 20ns for a seed value of 10. Fig. 7.shows the simulation results of a 16-bit LFSR.

B. Synthesis results in Xilinx ISE tool

The results were analysed after synthesis in Spartan 3E FPGA for 16, 32 and 64 bit LFSR in its various configurations. On analysis, it has been observed that modular LFSR has maximum frequency of operation of about 509 MHz compared to standard, complete or hybrid structure for any bit configuration. Complete LFSR has least speed of execution due to more number of gates involved in its critical path. Hybrid LFSR has frequency of operation comparable to that of Standard LFSR. Memory utilization was found to be same for all LFSR. Fig. 8 shows the synthesis of modular 16-bit LFSR in Spartan 3E FPGA. Table 1, 2, 3 shows the parametric analysis of 16, 32 and 64-bit LFSR respectively.

C. Synthesis results in RTL compiler

In ASIC synthesis of all LFSR designs it was observed that modular LFSR had maximum speed of execution of about 1.37 GHz and less switching power. Table 4 displays the synthesis results of different bit LFSR in RTL compiler. Area utilization was more in Complete LFSR due to more number of gates used for its implementation. Hybrid LFSR is efficient in terms of number of gates used and also had greater speed of execution than Standard LFSR. Fig. 9 shows the ASIC synthesis of modular 16-bit LFSR.

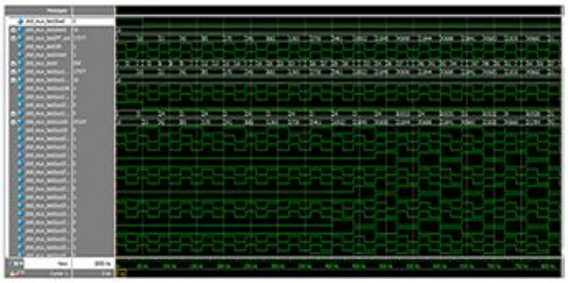

Fig. 7. Simulation result of a 16bit standard LFSR with seed value 10

TABLE I
PARAMETRIC ANALYSIS FOR DIFFERENT 16 BIT LFSR IN XILINX SPARTAN 3E FPGA

Performance parameters	Standard	Modular	Complete	hybrid
Number of slices	10	9	14	10
Number of Flipflops	16	16	16	16
Number of 4 input LUTs	17	16	25	17
Number of bonded IOBs	35	35	35	35
Numbre of GCLKs	1	1	1	1
Max frquency of operation(GHz)	378.652	509.671	211.759	378.652

TABLE II
PARAMETRIC ANALYSIS FOR DIFFERENT 32 BIT LFSR IN XILINX SPARTAN 3E FPGA

Performance parameters	Standard	Modular	Complete	hybrid
Number of slices	19	18	23	19
Number of Flipflops	32	32	32	32
Number of 4 input LUTs	33	32	41	33
Number of bonded IOBs	67	67	67	67
Numbre of GCLKs	1	1	1	1
Max frquency of operation(GHz)	368.684	509.671	244.987	378.652

TABLE III
PARAMETRIC ANALYSIS FOR DIFFERENT 64 BIT LFSR IN XILINX SPARTAN 3E FPGA

Performance parameters	Standard	Modular	Complete	hybrid
Number of slices	37	37	45	37
Number of Flipflops	64	64	64	64
Number of 4 input LUTs	65	64	81	65
Number of bonded IOBs	131	131	131	131
Numbre of GCLKs	1	1	1	1
Max frquency of operation(GHz)	368.684	509.671	222.526	378.652

V. CONCLUSION AND FUTURE SCOPE

This paper presents a reconfigurable Logic BIST architecture where every component was designed to be programmable. This design thus ensures self-testing of any kind of circuitry with varying configurations. PRPG and MISR structures were made reconfigurable by adding multiplexers into its designs and providing flexibility in the position of tap insertions which determines the feedback polynomials and the patterns generated. For MISR, XOR gates were added to every flip-flop inputs depending on the number of primary outputs of the CUT. Comparator and ROM were also designed to compare and store any number of inputs with varying size.

The analysis of this work shows that modular structure is efficient in terms of speed of execution and in gate utilization compared to other forms of Reconfigurable LFSR or MISR. Fig. 10 shows a comparison of power consumption among all types of LFSR. Fig. 11 shows the Gate utilization by various LFSRs in ASIC synthesis. Hybrid form due to its efficient configurations utilized less number of gates and had speed comparable to standard one. Complete LFSR/MISR even though generated 2^n patterns showed more area occupancy.

As future scope, the power consumed by the structure can be reduced further by including sleep transistors in the design or by using power gating techniques

TABLE IV
SYNTHESIS RESULTS OF 16, 32 AND 64 BIT LFSR IN RTL COMPILER

Type of LFSR	Size	Area(nm^2)	Mapped gates	Power(nW)	Speed(GHz)
Standard	16	155.27	51	8319.64	1.144
Modular	16	155.95	51	8114.89	1.373
Complete	16	164.16	57	8687.14	0.789
Hybrid	16	152.53	50	8133.43	1.188
Standard	32	303.01	99	14532.22	1.444
Modular	32	303.70	99	14624.36	1.373
Complete	32	321.82	111	15220.04	0.630
Hybrid	32	300.28	98	14478.52	1.188
Standard	64	598.50	195	30479.04	1.144
Modular	64	599.18	195	30098.95	1.373
Complete	64	637.15	219	32336.79	0.493
Hybrid	64	595.76	194	30538.83	1.188

Authorized licensed use limited to: POLO BIBLIOTECARIO DI INGEGNERIA. Downloaded on March 24,2026 at 08:40:10 UTC from IEEE Xplore. Restrictions apply.

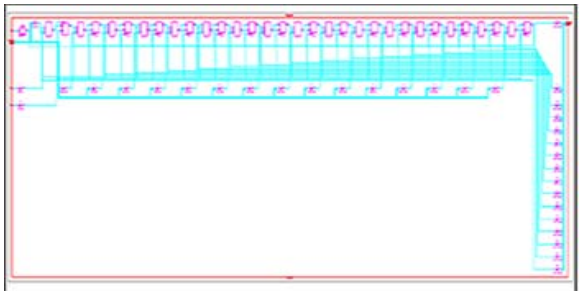

Fig. 8. Schematic diagram of 16bit Modular LFSR synthesized in FPGA

Fig. 9. Schematic diagram of 16bit Modular LFSR synthesized in ASIC

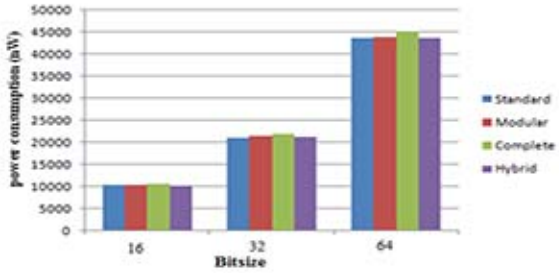

Fig. 10. Power consumed by various LFSRs in ASIC synthesis

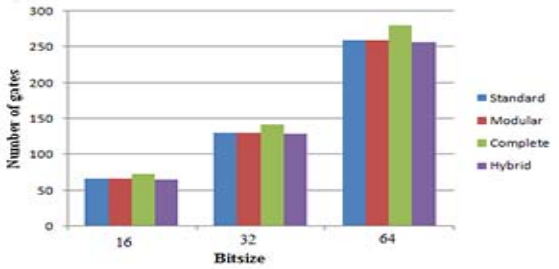

Fig. 11. Gate utilization by various LFSRs in ASIC synthesis

ACKNOWLEDGMENT

We would like to thank to Dr. Jyothi S. N., Principal, and Amrita School of Engineering for providing necessary facilities and an ideal environment to carry out this work. We avail this opportunity to express our sincere gratitude to our teachers for their guidance, advance and encouragement at every step of this endeavor.

REFERENCES

[1] Nagaraj S. Vannal, Saroja V. Siddamal, Shruthi V. Bidaralli, Mahalaxmi S. Bhille, "*Design and testing of combinational logic circuits using Build in Self Test scheme for FPGAs*," Fifth International Conference on Communication Systems and Network Technologies, pp. 903 – 907.

[2] Ramesh Bhakthavatchalu, Deepthy G R, Sreenivasa Mallia S, HariKrishnan R, ArunKrishnan, Sruthi.B, "*32-bit Reconfigurable Logic-BIST Design Using Verilog for ASIC Chips*," Recent Advances in Intelligent Computational Systems (RAICS), pp. 386–390, 2011.

[3] Ramesh Bhakthavatchalu, Sreeja Krishnan, Vineeth V, Nirmala Devi M., "*Deterministic Seed Selection and Pattern Reduction in Logic BIST*," VLSI Design and Test, 18th International Symposium on, 2014.

[4] Nisha Haridas, M. Nirmala Devi, "*Efficient Linear Feedback Shift Register design for Pseudo Exhaustive Test Generation in BIST*", 2011 3rd International Conference on Electronics Computer Technology, vol. 1, pp: 35-354, 2011.

[5] Ramesh Bhakthavatchalu and M. Nirmala Devi, "*Crypto Keys Based Secure Access Control for JTAG and Logic BIST Architecture*," International Journal of Engineering and Technology, vol. 7, no. 3, pp. 973–984, 2015.

[6] Ramesh Bhakthavatchalu, Saranya K. Kannan and M. Nirmala Devi, "*Verilog Design of Programmable JTAG Controller for Digital VLSI IC's*," Indian Journal of Science and Technology, vol. 8, 2015.

[7] Valarmathi Marudhai, "*Implementation of LFSR on ASIC*," 2012 Annual IEEE India Conference (INDICON), pp. 275 – 279, 2012.

[8] P. Dhanesh, A Jayanth Balaji, "*Dual threshold bit-swapping LFSR for power reduction in BIST*," Advanced Computing and Communication Systems, 2015 International Conference on, 2015.

[9] Amit Kumar Panda, Praveena Rajput, Bhawna Shukla, "*FPGA Implementation of 8, 16 and 32 Bit LFSR with Maximum Length Feedback Polynomial Using VHDL*," Communication Systems and Network Tech-nologies (CSNT), 2012 International Conference on, pp. 769 – 773, 2012.

[10] P. R. Sruthi and M. Nirmala Devi, "*A modified scheme for simultaneous reduction of test data volume and testing power*", Sixteenth International Symposium on VLSI Design and Test (VDAT) 2012, vol. 7373 LNCS, pp. 198-208, 2012.

[11] Lama Shaer, Tarek Sakakini, Rouwaida Kanj, Ali Chehab; Ayman Kayssi, "*A low power reconfigurable LFSR*," 2016 18th Mediterranean Electrotechnical Conference (MELECON), pp. 1–4, 2016.

[12] [10] Li-Ren Huang, Jing-Yang Jou, and Sy-Yen Kuo, "*Gauss-Elimination-Based Generation of Multiple Seed–Polynomial Pairs for LFSR*," IEEE Transactions on computer-aided design of Integrated Circuits and Systems, vol. 16, no. 9, September 1997

[13] Wang Zhiyuan, Huang Jianhua, Guan Ziming, "*A Kind of Reconfigurable Linear Feedback Register Design*," Information Technology and Applications, 2009. IFITA '09. International Forum on, vol. 2, pp. 657–660, 2009.

[14] Leonard Colavito and Dennis Silage, "*Efficient FPGA LFSR Implementation Whitens Pseudorandom Numbers*," 2009 International Confer-ence on Reconfigurable Computing and FPGAs, 2009.

[15] Nagaraj s vannal, saroja v siddamal, shruti v bidaralli, mahalaxmi s bhille, "*Design and testing of combinational Logic circuits using built in self Test scheme for fpgas*," 2015 fifth international conference on communication systems and network technologies, 2015.

[16] R. Mita, G. Palumbo, S. Pennisi, M. Poli, "*A novel pseudo random bit generator for cryptography applications*," Electronics, Circuits and Systems, 2002. 9th International Conference on, vol. 2, pp. 489 – 492, 2002. .

[17] Samir Palnitkar, "*Verilog HDL: A Guide to Digital Design and Synthesis*," Prentice Hall PTR, One Lake Street, Upper Saddle River, United States of America, 2003.

[18] V.Nagarajan, "FPGA Based Reconfigurable Measurement Instrument with Functinality defined by user" *International conference on Advances in Engineering and Technology*, EGS Pillai Engineering College, may 2011.

Authorized licensed use limited to: POLO BIBLIOTECARIO DI INGEGNERIA. Downloaded on March 24,2026 at 08:40:10 UTC from IEEE Xplore. Restrictions apply.