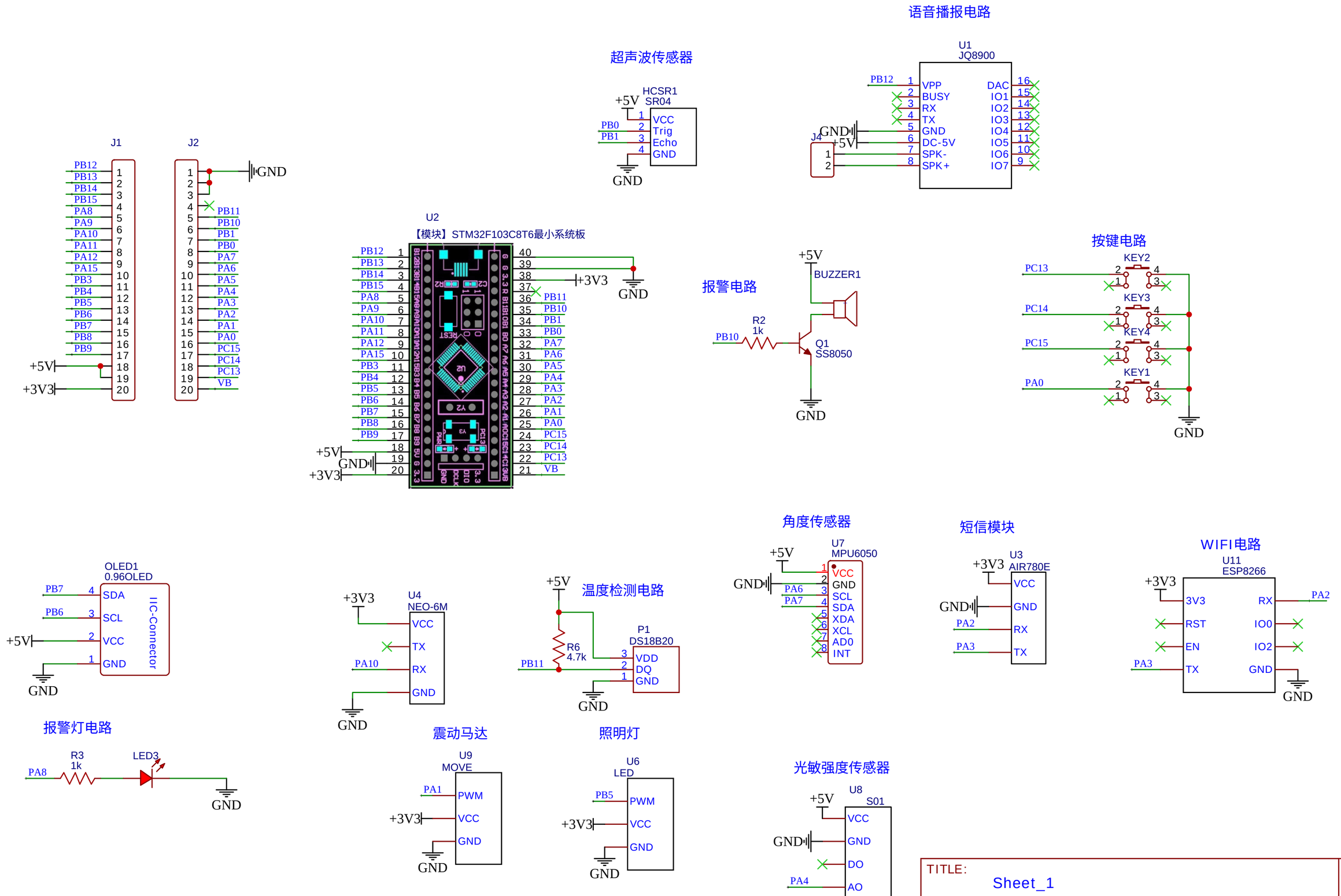

TITLE: Sheet_1	REV: 1.0
嘉立创EDA Company: Your Company	Sheet: 1/1
Date: 2024-04-03 Drawn By: Allen2020	

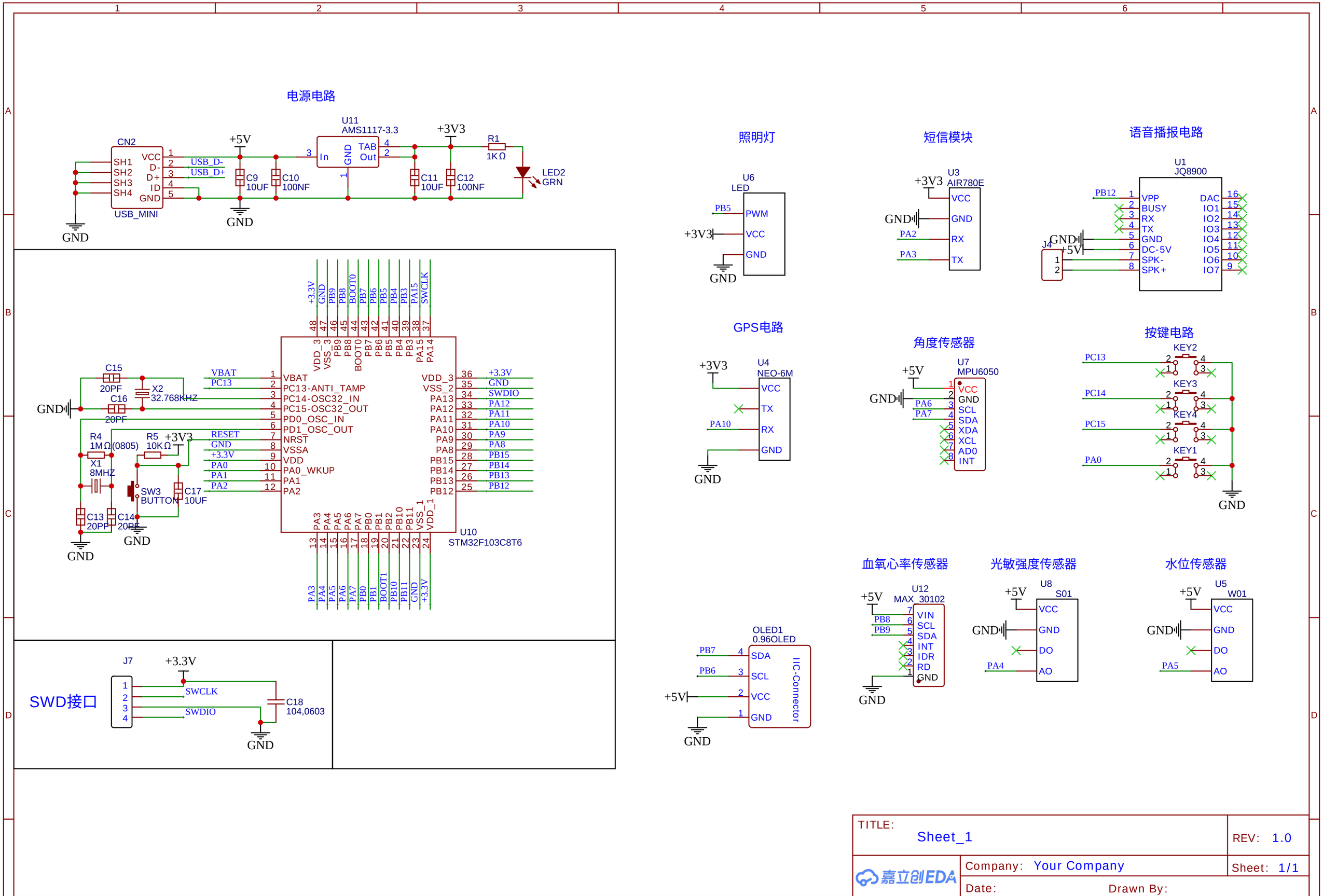
电源电路
CN2
USB_MINI
U11
AMS1117-3.3
+5V
+3V3
R1
1KΩ
LED2
GRN
C9
10UF
C10
100NF
C11
10UF
C12
100NF
GND
照明灯
U6
LED
PB5
PWM
VCC
短信模块
U3
AIR780E
PA2
RX
PA3
TX
语音播报电路
U1
JQ8900
PB12
VPP
BUSY
DAC
DC-5V
SPK-
SPK+
J4
GPS电路
U4
NEO-6M
PA10
角度传感器
U7
MPU6050
PA6
PA7
SCL
SDA
XDA
XCL
AD0
INT
按键电路
KEY1
KEY2
KEY3
KEY4
PC13
PC14
PC15
PA0
C15
20PF
C16
20PF
X2
32.768KHZ
R4
1MΩ(0805)
R5
10KΩ
X1
8MHZ
SW3
BUTTON
C17
10UF
C13
20PF
C14
20PF
U10
STM32F103C8T6
VBAT
PC13-ANTI_TAMP
PC14-OSC32_IN
PC15-OSC32_OUT
PD0_OSC_IN
PD1_OSC_OUT
NRST
VSSA
VDD
PA0_WKUP
PA1
PA2
VDD_3
VSS_2
PA13
PA12
PA11
PA10
PA9
PA8
PB15
PB14
PB13
PB12
SWDIO
血氧心率传感器
U12
MAX 30102
VIN
SCL
SDA
INT
IDR
RD
光敏强度传感器
U8
S01
VCC
GND
DO
AO
水位传感器
U5
W01
OLED1
0.96OLED
IIC-Connector
SWD接口
J7
SWCLK
SWDIO
C18
104,0603
TITLE:
Sheet_1
REV: 1.0
Company: Your Company
Sheet: 1/1
Date:
Drawn By:
嘉立创EDA