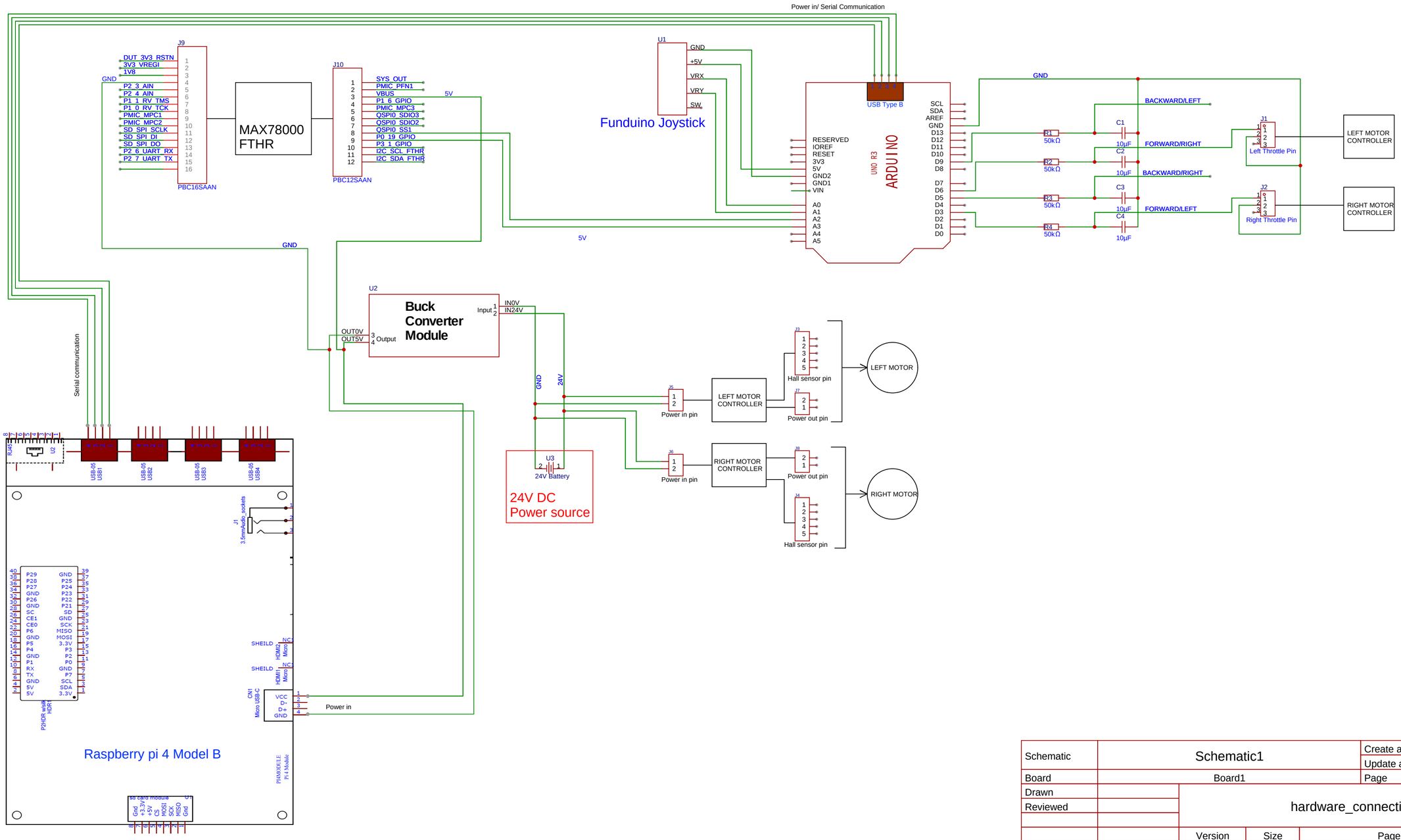

Schematic	Schematic1	Create at	2025-01-14
		Update at	2025-01-15
Board	Board1	Page	P1
Drawn	hardware_connection		
Reviewed			
	Version	Size	Page 1 Total 1
EasyEDA	V1.0	A4	EasyEDA.com