The Consultative Committee for Space Data Systems

Recommendation for Space Data System Practices

DELTA-DIFFERENTIAL ONE WAY RANGING (DELTA-DOR) OPERATIONS

RECOMMENDED PRACTICE

CCSDS 506.0-M-2

MAGENTA BOOK

February 2018

The Consultative Committee for Space Data Systems

Recommendation for Space Data System Practices

DELTA-DIFFERENTIAL ONE WAY RANGING (DELTA-DOR) OPERATIONS

RECOMMENDED PRACTICE

CCSDS 506.0-M-2

MAGENTA BOOK

February 2018

AUTHORITY

Issue:	Recommended Practice, Issue 2
Date:	February 2018
Location:	Washington, DC, USA

This document has been approved for publication by the Management Council of the Consultative Committee for Space Data Systems (CCSDS) and represents the consensus technical agreement of the participating CCSDS Member Agencies. The procedure for review and authorization of CCSDS documents is detailed in *Organization and Processes for the Consultative Committee for Space Data Systems* (CCSDS A02.1-Y-4), and the record of Agency participation in the authorization of this document can be obtained from the CCSDS Secretariat at the e-mail address below.

This document is published and maintained by:

CCSDS Secretariat
National Aeronautics and Space Administration
Washington, DC, USA
E-mail: secretariat@mailman.ccsds.org

STATEMENT OF INTENT

The Consultative Committee for Space Data Systems (CCSDS) is an organization officially established by the management of its members. The Committee meets periodically to address data systems problems that are common to all participants, and to formulate sound technical solutions to these problems. Inasmuch as participation in the CCSDS is completely voluntary, the results of Committee actions are termed **Recommendations** and are not in themselves considered binding on any Agency.

CCSDS Recommendations take two forms: **Recommended Standards** that are prescriptive and are the formal vehicles by which CCSDS Agencies create the standards that specify how elements of their space mission support infrastructure shall operate and interoperate with others; and **Recommended Practices** that are more descriptive in nature and are intended to provide general guidance about how to approach a particular problem associated with space mission support. This **Recommended Practice** is issued by, and represents the consensus of, the CCSDS members. Endorsement of this **Recommended Practice** is entirely voluntary and does not imply a commitment by any Agency or organization to implement its recommendations in a prescriptive sense.

No later than five years from its date of issuance, this **Recommended Practice** will be reviewed by the CCSDS to determine whether it should: (1) remain in effect without change; (2) be changed to reflect the impact of new technologies, new requirements, or new directions; or (3) be retired or canceled.

In those instances when a new version of a **Recommended Practice** is issued, existing CCSDS-related member Practices and implementations are not negated or deemed to be non-CCSDS compatible. It is the responsibility of each member to determine when such Practices or implementations are to be modified. Each member is, however, strongly encouraged to direct planning for its new Practices and implementations towards the later version of the Recommended Practice.

FOREWORD

Through the process of normal evolution, it is expected that expansion, deletion, or modification of this document may occur. This Recommended Practice is therefore subject to CCSDS document management and change control procedures, which are defined in the *Organization and Processes for the Consultative Committee for Space Data Systems* (CCSDS A02.1-Y-4). Current versions of CCSDS documents are maintained at the CCSDS Web site:

http://www.ccsds.org/

Questions relating to the contents or status of this document should be sent to the CCSDS Secretariat at the e-mail address indicated on page i.

DOCUMENT CONTROL

Document	Title	Date	Status
CCSDS 506.0-M-1	Delta-Differential One Way Ranging (Delta-DOR) Operations, Recommended Practice, Issue 1	April 2011	Original issue, superseded
CCSDS 506.0-M-2	Delta-Differential One Way Ranging (Delta-DOR) Operations, Recommended Practice, Issue 2	February 2018	Current issue: Changes compatible with previous issue: – adds clarifications – renames 'Service Request' to 'Support Request' – adds examples of Support Requests as new annex – deletes section 7 in favor of new references to 'DDOR X-Band Radio Sources' SANA registry and *Delta-DOR Quasar Catalog Update Procedure* Changes not compatible with previous issue: – adds subsection on quantitative validation criteria – adds Support Request specifications – adds, modifies parameters for the DDOR Ground Observation Event Sequence
CCSDS 506.0-M-2 EC 1	Editorial change 1	September 2024	– corrects typographical anomalies; – converts to A4 page size.

NOTE – Changes from the original issue are too numerous to permit meaningful use of change bars.

CONTENTS

Section Page

1 INTRODUCTION 1-1

1.1 PURPOSE 1-1
1.2 SCOPE AND APPLICABILITY 1-2
1.3 CONVENTIONS AND DEFINITIONS 1-2
1.4 STRUCTURE OF THIS DOCUMENT 1-3
1.5 REFERENCES 1-4

2 OVERVIEW 2-1

2.1 GENERAL 2-1
2.2 THE DELTA-DOR TECHNIQUE 2-1
2.3 ADVANTAGES OF DELTA-DOR 2-3
2.4 LIMITATIONS OF DELTA-DOR 2-5

3 DEFINITIONS FOR INTERAGENCY DELTA-DOR 3-1

3.1 OVERVIEW 3-1
3.2 ROLES OF PARTICIPATING AGENCIES IN OPERATIONAL SCENARIOS 3-1
3.3 ROLES OF PARTICIPATING AGENCIES IN VALIDATION SCENARIOS 3-1
3.4 DEFINITION OF THE OPERATIONAL SCENARIOS 3-1
3.5 DEFINITION OF THE VALIDATION SCENARIOS 3-2
3.6 DEFINITION OF THE INTERFACES 3-2
3.7 DEFINITION OF PARAMETERS INTERVENING IN THE MEASUREMENT 3-4

4 DESCRIPTION OF OPERATIONAL SCENARIOS 4-1

4.1 OVERVIEW 4-1
4.2 SCENARIO 1 4-1
4.3 SCENARIO 2 4-3
4.4 SCENARIO 3 4-5
4.5 SCENARIO 4 4-7

5 DESCRIPTION OF VALIDATION PROCESS 5-1

5.1 OVERVIEW 5-1
5.2 INTEROPERABILITY VALIDATION STEP 1—TRAJECTORY PREDICTION AND OBSERVABLE MODELING 5-1

CONTENTS (continued)

Section Page

5.3 INTEROPERABILITY VALIDATION STEP 2—DATA COLLECTION.....5-3
5.4 INTEROPERABILITY VALIDATION STEP 3—DATA PROCESSING.....5-5
5.5 QUANTITATIVE VALIDATION CRITERIA.....5-7

6 INTERAGENCY DATA EXCHANGE PRODUCTS AND PROCEDURES 6-1

6.1 GENERAL 6-1
6.2 DELTA-DOR SUPPORT REQUEST MESSAGE EXCHANGE SPECIFICATIONS 6-1
6.3 ORBITAL EPHEMERIS FILES EXCHANGE SPECIFICATIONS.....6-10
6.4 RAW DELTA-DOR DATA TRANSFER/EXCHANGE SPECIFICATIONS 6-11
6.5 METEO DATA EXCHANGE SPECIFICATIONS 6-12
6.6 REDUCED DELTA-DOR DATA TRANSFER/EXCHANGE SPECIFICATIONS 6-12

ANNEX A ITEMS FOR AN IMPLEMENTING ARRANGEMENT (IA) (NORMATIVE).....A-1
ANNEX B SECURITY, SANA AND PATENT CONSIDERATIONS (INFORMATIVE).....B-1
ANNEX C SUPPORT REQUEST EXAMPLES (INFORMATIVE).....C-1
ANNEX D ABBREVIATIONS AND ACRONYMS (INFORMATIVE).....D-1
ANNEX E INFORMATIVE REFERENCES (INFORMATIVE).....E-1

Figure

2-1 Delta-DOR Observation Geometry.....2-1
2-2 Error Ellipses in the Mars Targeting Plane.....2-4
3-1 High-Level Delta-DOR Interface Definition 3-3

Table

3-1 Definition of Cross-Support Scenarios 3-2
3-2 Definition of Cross-Support Validation Scenarios 3-2
6-1 Definition of Delta-DOR Ground Observation Event Sequence Parameters 6-2
6-2 Definition of DDOR Configuration Profile Parameters.....6-7

1 INTRODUCTION

1.1 PURPOSE

This Recommended Practice specifies a set of standard practices and message formats for use in the navigation technique known as Delta Differential One-Way Ranging (Delta-DOR). It has been developed via consensus of the Delta-DOR Working Group of the CCSDS Systems Engineering Area (SEA).

Delta-DOR is a Very Long Baseline Interferometry (VLBI) technique that can be used in conjunction with Doppler and ranging data to improve spacecraft navigation by more efficiently determining spacecraft angular position in the plane of sky. The establishment of interoperability for acquiring and processing Delta-DOR data at ground stations of different agencies, the standardization of support request for Delta-DOR, the standardization of an exchange format for raw data, and standardization of interfaces for exchange of supporting products are key enablers for interagency execution of Delta-DOR operations.

The Recommended Practice addresses aspects of the technique that require standardization in order to enable Delta-DOR interoperability between space agencies, e.g., configuration requirements for interagency Delta-DOR measurement; interagency exchange of measurement data; parameters that are necessary in order to correlate and process the data at one of the agencies; interagency transfer of the generated observables; and the end-to-end flow of control. It is believed that such standards will reduce development and operations costs while improving navigation capabilities by increasing the number of intercontinental ground station baselines.

There are essentially three parts to providing Delta-DOR services, the first being the definition of the RF domain signals and reception, the second being the definition of the input and output data products, and the third being the definition of the method for requesting service and transferring data products. The first of these is allocated to the CCSDS Space Link Service (SLS) Area (reference [1]); the second is allocated to the Mission Operations and Information Management Services (MOIMS) Area (reference [3]); the third will be developed as Space Link Extension (SLE) Support Request extensions which will be allocated to the Service Management Working Group within the Cross Support Services (CSS) Area (reference [E9]).

The purpose of this Magenta Book is the production of a set of recommendations for facilitating interagency Delta-DOR operations that can both be useful now and evolve to meet future needs. The present document is intended to provide a set of standard practices to be used for setting up Delta-DOR measurements among different agencies, covering all of the required elements and describing how they are combined to provide the desired service.

Also, this book provides recommendations on the methodology for validating the main functions involved in a Delta-DOR measurement execution and introduces quantitative criteria to assess the level of performance of the validated capability.

1.2 SCOPE AND APPLICABILITY

Delta-DOR operations are applicable to space agencies that operate deep space missions that require accurate determination of the spacecraft position in the plane of the sky. For operations where these requirements do not capture the needs of the participating agencies, Delta-DOR operations may not be appropriate.

This Recommended Practice addresses rationale, requirements and criteria that Delta-DOR operations processes should be designed to meet.

1.3 CONVENTIONS AND DEFINITIONS

1.3.1 GENERAL

Conventions and definitions of Delta-DOR concepts are provided in reference [E1], *Delta-DOR—Technical Characteristics and Performance*. This reference provides a detailed description of the Delta-DOR technique, including guidelines for DOR tone spectra, guidelines for selecting reference sources, applicable foundation equations, and a discussion of error sources and measurement accuracy that are not germane to the recommendations presented in this document.

1.3.2 NOMENCLATURE

1.3.2.1 Normative Text

The following conventions apply for the normative specifications in this Recommended Practice:

- the words ‘shall’ and ‘must’ imply a binding and verifiable specification;
- the word ‘should’ implies an optional, but desirable, specification;
- the word ‘may’ implies an optional specification;
- the words ‘is’, ‘are’, and ‘will’ imply statements of fact.

NOTE – These conventions do not imply constraints on diction in text that is clearly informative in nature.

1.3.2.2 Informative Text

In the normative sections of this document, informative text is set off from the normative specifications either in notes or under one of the following subsection headings:

- Overview;
- Background;

– Rationale;

– Discussion.

1.3.3 COMMON DELTA-DOR TERMINOLOGY

Part of the standardization process involves the determination of common interagency terminology and definitions that apply to interagency Delta-DOR. The following terms are used in this Recommended Practice:

Term	Meaning
baseline	The vector joining two tracking stations
channel	A slice of the frequency spectrum that contains a spacecraft or quasar signal
scan	An observation of a radio source (spacecraft or quasar), typical duration of a few minutes
session	The time period of the Delta-DOR measurement including several scans
spanned bandwidth	The widest frequency separation between downlink signal components
P_T/N_0	Total Power to Noise Spectral Density ratio
P_{Tone}/N_0	Tone Power to Noise Spectral Density ratio
meteo data	Meteorological Data (as a minimum: pressure, temperature, relative humidity must be considered; slant total electron content might also be provided)

1.4 STRUCTURE OF THIS DOCUMENT

In addition to this section, this document contains the following sections and annexes:

– Section 2 provides a general overview of Delta-DOR technique.

– Section 3 provides a set of definitions for the interagency Delta-DOR.

– Section 4 describes the Delta-DOR interoperability scenarios.

– Section 5 discusses the interagency Delta-DOR validation process and related quantitative criteria for performance evaluation.

– Section 6 discusses the interagency data exchange products and procedures.

- Annex A lists a number of items that should be covered in an interagency Implementing Arrangement (IA) prior to commencing regular Delta-DOR operations. There are several statements throughout the document that refer to the necessity of such a document; this annex consolidates all the suggested IA items in a single list in the document.
- Annex B discusses security, SANA, and patent considerations applied to the technologies specified in this Recommended Practice.
- Annex C provides Support Request examples.
- Annex D is a list of abbreviations and acronyms applicable to Delta-DOR Operations.
- Annex E contains a list of informative references.

1.5 REFERENCES

The following documents contain provisions which, through reference in this text, constitute provisions of this Recommended Practice. At the time of publication, the editions indicated were valid. All documents are subject to revision, and users of this Recommended Practice are encouraged to investigate the possibility of applying the most recent editions of the documents indicated below. The CCSDS Secretariat maintains a register of currently valid CCSDS documents.

[1] *Radio Frequency and Modulation Systems—Part 1: Earth Stations and Spacecraft*. Issue 26. Recommendation for Space Data System Standards (Blue Book), CCSDS 401.0-B-26. Washington, D.C.: CCSDS, October 2016.

[2] *Orbit Data Messages*. Issue 2. Recommendation for Space Data System Standards (Blue Book), CCSDS 502.0-B-2. Washington, D.C.: CCSDS, November 2009.

[3] *Tracking Data Message*. Issue 1. Recommendation for Space Data System Standards (Blue Book), CCSDS 503.0-B-1. Washington, D.C.: CCSDS, November 2007.

[4] *Delta-DOR Raw Data Exchange Format*. Issue 1. Recommendation for Space Data System Standards (Blue Book), CCSDS 506.1-B-1. Washington, D.C.: CCSDS, June 2013.

[5] "DDOR X-Band Radio Sources." Space Assigned Numbers Authority (SANA). http://sanaregistry.org/r/radio_sources.

[6] *Time Code Formats*. Issue 4. Recommendation for Space Data System Standards (Blue Book), CCSDS 301.0-B-4. Washington, D.C.: CCSDS, November 2010.

[7] "Contacts." Space Assigned Numbers Authority. http://sanaregistry.org/r/contacts/.

[8] "Service Sites and Apertures." Space Assigned Numbers Authority. https://sanaregistry.org/r/service_sites_apertures.[1]

[9] "Spacecraft Identifiers." Space Assigned Numbers Authority. http://sanaregistry.org/r/spacecraftid.

[10] "Roles." Space Assigned Numbers Authority. https://sanaregistry.org/r/roles.

[11] "Organizations." Space Assigned Numbers Authority (SANA). http://sanaregistry.org/r/organizations.

NOTE – Informative references are provided in annex E.

[1] At time of publication, only members of the Interagency Operations Advisory Group can access this registry.

2 OVERVIEW

2.1 GENERAL

This section provides a high-level overview of the Delta-DOR technique, its advantages, and disadvantages.

2.2 THE DELTA-DOR TECHNIQUE

Very Long Baseline Interferometry (VLBI) is a technique that allows determination of angular position for distant radio sources by measuring the geometric time delay between received radio signals at two geographically separated stations. The observed time delay is a function of the known baseline vector joining the two radio antennas and the direction to the radio source.

An application of VLBI is spacecraft navigation in space missions where delay measurements of a spacecraft radio signal are compared against similar delay measurements of angularly nearby quasar radio signals. In the case where the spacecraft measurements are obtained from the phases of tones emitted from the spacecraft, first detected separately at each station, and then differenced, this application of VLBI is known as Delta Differential One-Way Ranging ('Delta-DOR' or 'ΔDOR'). (The observation geometry is illustrated in figure 2-1.) Even though data acquisition and processing are not identical for the spacecraft and quasar, both types of measurements can be interpreted as delay measurements and they have similar information content and similar sensitivity to sources of error (reference [E1]). The data produced in such a measurement session are complementary to Doppler and ranging data.

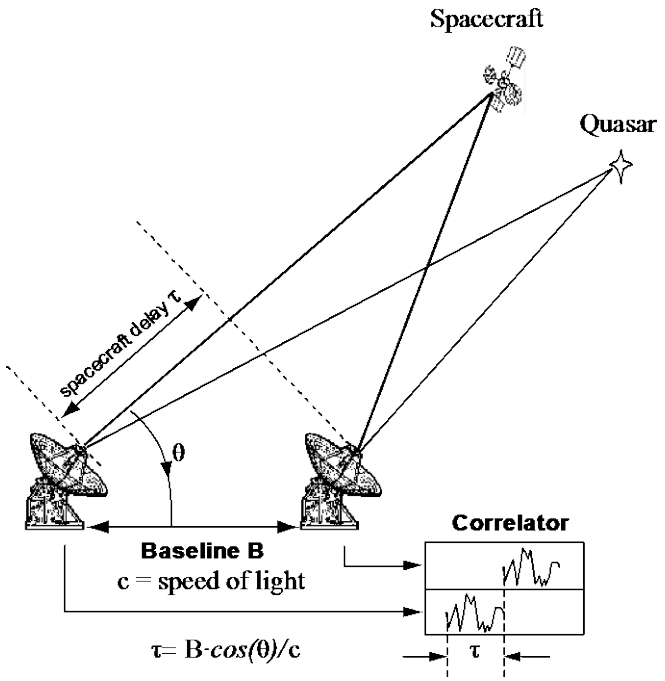

Figure 2-1: Delta-DOR Observation Geometry

To enable a Delta-DOR measurement, a spacecraft must emit several tones or other signal components spanning at least a few MHz. The characteristics of the tones are selected based on the requirements for phase ambiguity resolution, measurement accuracy, efficient use of spacecraft signal power, efficient use of ground tracking resources, and the frequency allocation for space research.

The Delta-DOR technique requires that the spacecraft be tracked simultaneously at two distinct radio antennas. A quasar must also be tracked simultaneously just before and/or after the spacecraft observation. Thus a viewing overlap between the two antenna complexes is required; the degree of overlap is dependent upon the relative station locations, and varies for each pair of antenna complexes. Normally, a Delta-DOR pass consists of three or more scans of data recording, each of a few minutes duration. A scan consists of pointing the antennas to one radio source and recording the signal. The antennas must slew to another radio source for the next scan, and so on. The observing sequence is spacecraft-quasar-spacecraft, quasar-spacecraft-quasar, or a longer sequence of alternating observations, depending on the characteristics of the radio sources and the objectives of the measurement session. A minimum of three scans is required to eliminate clock-epoch and clock-rate offsets and then measure spacecraft angular position. Normally a three-scan sequence is repeated several times within about one hour. Once collected, the received signals are brought to a common site and correlated. A Delta-DOR observable is generated from spacecraft delay measurements and quasar delay measurements made at two ground antennas. The observed quantity in a Delta-DOR observation is time delay for each scan of a radio source.

For a spacecraft, the signals emitted for this purpose are referred to as DOR tones. The DOR tones are generated by modulating a sine wave or square wave onto the downlink carrier at S-band, X-band, or Ka-band. Either a pure waveform may be used, producing a spectrum of pure tones, or a modulated waveform may be used, producing a spectrum that more closely resembles that of a natural radio source. DOR observables are formed by differencing spacecraft tone phase measurements done at the two stations. The station differencing eliminates spacecraft clock offsets. However, DOR measurements made in this way are still affected by ground station clock offsets and instrumental delays.

For measuring the quasar, each station is configured to acquire data from it in frequency channels centered on the spacecraft tone frequencies. This receiver configuration choice ensures that the spacecraft-quasar differencing nearly eliminates the effects of ground station clock offsets and instrumental delays. By selecting a quasar that is close in an angular sense to the spacecraft, and by observing the quasar at nearly the same time as the spacecraft, the effects of errors in the modeled station locations, Earth orientation, and transmission media delays are strongly diminished. A common radio source catalog such as the one defined in reference [5], needs to be used by all agencies to facilitate consistency in radio source selection, pointing, and correlating. For best accuracy a radio-source catalog formed from observations in the same RF band as the DOR measurements should be used.

To plan for a measurement, the catalog is searched to find candidate sources that are angularly close to the spacecraft position at the measurement time, and of sufficient flux. Then specific sources are selected for observation based on some criteria such as minimizing measurement error.

In navigation processing, the delay or DOR observable is modeled for each scan of each radio source. The measured observable depends on both geometric factors and on delays introduced by transmission media. Meteo data are provided from each tracking site so that, possibly in conjunction with other data such as GPS measurements, corrections can be computed to account for tropospheric and ionospheric path delays. The modeled or 'computed' observable is based on geometric parameters and available calibrations for tropospheric and ionospheric delays. Residuals are formed by subtracting the computed observables from the measured time delay values. The 'Delta' between spacecraft and quasar observations is generated internal to the navigation processing by subtracting residual values of quasar observations from residual values of spacecraft observations.

Because each Delta-DOR measurement requires the use of two antennas, and navigation accuracy is improved by baseline diversity, this technique is highly conducive to interagency cooperation. Measurements from two baselines are required to determine both components of angular position, with orthogonal baselines providing the best two-dimensional coverage. The existing assets of more than one agency today could provide two or more pairs of angularly separated baselines and good geometric coverage for missions throughout the ecliptic plane. Stations from different agencies can be used as Delta-DOR data collectors for navigation purposes, assuming that the infrastructure has been laid to facilitate such cooperation. Such infrastructure should include dedicated hardware (i.e., open loop receivers), enough data storage capacity at each ground station to handle the large volume of data, and communication lines adequate to transfer such data to a common correlator facility. The use of Delta-DOR has been very beneficial for numerous NASA, ESA, and JAXA missions, beginning with Voyager in 1979. Delta-DOR use has become a standard part of many mission navigation plans. CCSDS standardization has helped expand the use of the technique by allowing interagency cross support.

2.3 ADVANTAGES OF DELTA-DOR

Earth-based radio metric tracking is the primary source of navigational data (Doppler and ranging) during interplanetary cruise. The advantages of using Delta-DOR measurements along with line-of-sight Doppler and ranging data include:

- Delta-DOR provides improved angular accuracy by direct geometric measurement of the plane-of-sky position of a spacecraft in the inertial reference frame defined by the quasars.
- Orbit solutions based on line-of-sight and Delta-DOR data show less sensitivity to systematic errors, as compared to orbit solutions based on only line-of-sight measurements, because of direct observation of all components of state. (See figure 2-2 below from Mars Exploration Rover data, reference [E8].) Targeting plane, commonly referred to as 'B-Plane', coordinates are typically used to describe planetary approach trajectories. Uncertainties in the approach trajectory are represented by error ellipses. Better planetary approach trajectories are characterized by smaller error ellipses.

- Solutions which incorporate Delta-DOR do not have singularities at low geocentric declinations or other adverse geometries.
- Delta-DOR data can be used to obtain reasonable trajectory accuracy with just a short data arc (few days). Spacecraft state can be recovered more quickly following a maneuver using Delta-DOR. By contrast, trajectory accuracy using Doppler and ranging only typically depends strongly on data arc length.
- Navigation requirements can be satisfied by reduced tracking time per week, thus reducing both the duration and number of weekly tracking passes; e.g., Delta-DOR tracks may be used during an extended mission to meet navigation needs with a sparse tracking schedule.
- Delta-DOR data may be acquired in a listen-only mode; an uplink is not required.

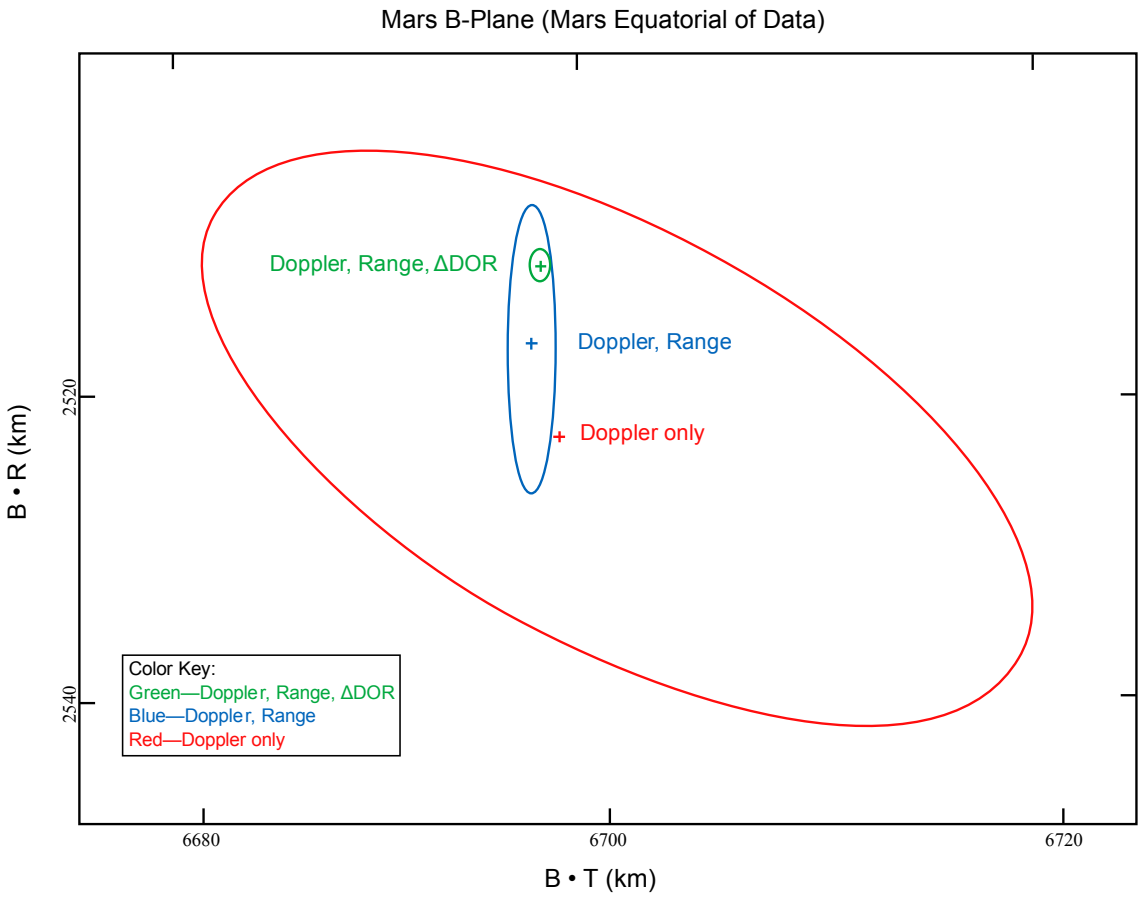

Figure 2-2: Error Ellipses in the Mars Targeting Plane[2]

[2] Courtesy of JPL/Caltech.

2.4 LIMITATIONS OF DELTA-DOR

There are also some limitations of using Delta-DOR measurements, including:

- Because of the need to coordinate resources at two antenna complexes, and the requirement for view-period overlap, both the scheduling and execution of a Delta-DOR measurement session are more complex than measurement scenarios that involve only a single antenna.
- It is usually not possible to collect telemetry data during the time that the Delta-DOR measurement is in progress.

3 DEFINITIONS FOR INTERAGENCY DELTA-DOR

3.1 OVERVIEW

Delta-DOR operations requirements address functionality, processes, contents, and implementation approach for interoperability. Two kinds of scenarios are addressed: operational scenarios, in which Delta-DOR is used to support a flying mission, and validation scenarios, in which the validation of Delta-DOR capability is performed. First, roles of participating agencies in operational scenarios are defined. Then, roles of participating agencies in validation scenarios are also defined.

3.2 ROLES OF PARTICIPATING AGENCIES IN OPERATIONAL SCENARIOS

The following roles of participating agencies in operational scenarios are defined:

- Data Usage Agency (DUA): agency that provides the spacecraft (S/C) predicted trajectory and performs Delta-DOR observable modeling.
- Data Collection Agency (DCA): agency that collects the raw Delta-DOR data (there may be more than one).
- Data Processing Agency (DPA): agency that processes (correlates) the raw Delta-DOR data.

3.3 ROLES OF PARTICIPATING AGENCIES IN VALIDATION SCENARIOS

The following roles of participating agencies in validation scenarios are defined:

- Validating Agency (VA): agency that validates a specific function. Being the agency that validates part of the Delta-DOR system, this agency is supposed to have this system already operational and validated in terms of interoperability with other agencies.
- Under Validation Agency (UVA): agency that undergoes the validation process for a specific part of the Delta-DOR system.

The relationship between VA and UVA may be established at DUA, DCA, or DPA level.

3.4 DEFINITION OF THE OPERATIONAL SCENARIOS

The following table represents the four recognized interagency Delta-DOR operational scenarios. Each scenario is independent from the others. The notation A1=Agency 1, A2=Agency 2, etc., is used.

Table 3-1: Definition of Cross-Support Scenarios

	Agency		
Scenario	**DUA**	**DCA**	**DPA**
1	A1	A2	A2
2	A1	A1 &A2/A3	A1 or A2
3	A1	A2 & A3	A1
4	A1	A2 & A3	A2 or A3

NOTE – The scenarios identified in table 3-1 are described in section 4.

3.5 DEFINITION OF THE VALIDATION SCENARIOS

The following table identifies the three recognized interagency Delta-DOR validation steps. The notation adopted in 3.2 is used. Each scenario is independent from the others.

Table 3-2: Definition of Cross-Support Validation Scenarios

	Agency			
Step	**DUA**	**DCA**	**DPA**	**Validates**
1	UVA	VA	VA	Trajectory prediction and observable modeling
2	VA	UVA&VA, UVA	VA	Data collection
3	VA	VA	UVA	Data processing

NOTE – The scenarios identified in table 3-2 are described in section 5.

3.6 DEFINITION OF THE INTERFACES

The high-level Delta-DOR data flow below shows various interfaces (numbered 1 through 7 in figure 3-1) where standardization is beneficial in terms of establishing interoperability. Figure 3-1 also contains the roles of operational scenarios as defined in 3.2.

In general, the Recommended Practice covers the necessary parameters at each stage of the data flow. During data acquisition, radio source signals arrive at an antenna that belongs to a Data Collecting Agency, are detected by a receiver (Rx), and then stored at the site. Next, data from at least two sites are transferred to a Data Processing Agency and correlated to generate observables. Finally, reduced data (e.g., time delay observables and clock offset) and meteo data used to calibrate path delays through transmission media are provided to the Orbit Determination (Data User Agency).

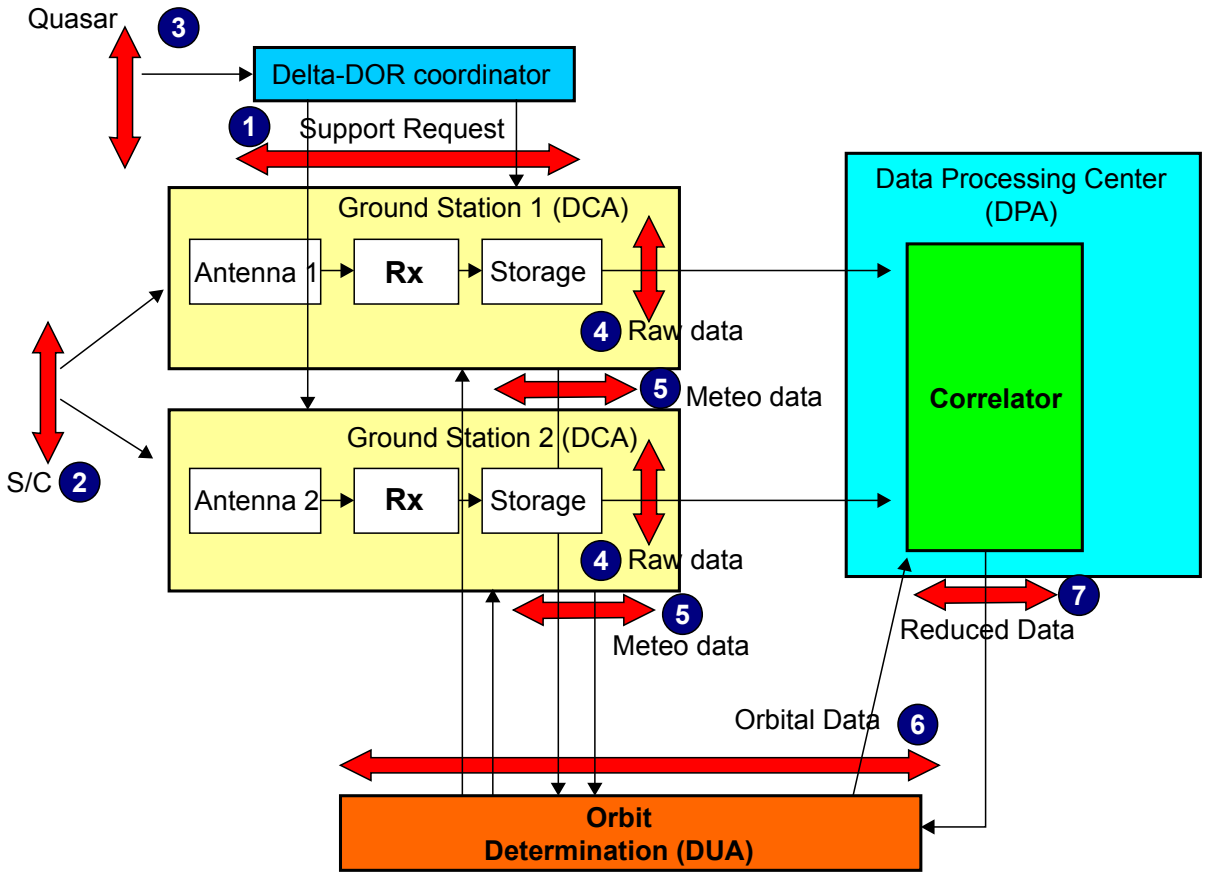

Figure 3-1: High-Level Delta-DOR Interface Definition

With reference to figure 3-1 the following interfaces can be defined:

- IF-1: Support Request; includes observation schedule and sequence. This interface is described in 6.2.
- IF-2: DOR signal for S/C tracking. This interface is defined in CCSDS 401 (2.5.6B) B-2 (reference [1]).
- IF-3: quasar catalog for Delta-DOR (reference [5]); provides quasar coordinates and flux that are used for measurement planning. This interface is described in reference [5].
- IF-4: exchange format for raw Delta-DOR data. This interface is defined by the Raw Data Exchange Format (RDEF) in reference [4] and may differ from the native format used for raw data by an Agency.
- IF-5: meteo data. This interface is defined by the Tracking Data Message (TDM—reference [3]).
- IF-6: orbital data. These data are used at all stations to define antenna pointing during data acquisition and received frequency predictions. These data are also input to the Delta-DOR correlator. This input relies on the S/C orbit prediction, and therefore

information is exchanged among agencies via Orbit Ephemeris Message (OEM) products (reference [2]).

– IF-7: reduced data. These are the products of the Delta-DOR. This interface is defined by the Tracking Data Message (TDM—reference [3]).

3.7 DEFINITION OF PARAMETERS INTERVENING IN THE MEASUREMENT

3.7.1 GENERAL

3.7.1.1 Basic information needed to enable cross support between Agencies shall first be documented in an Implementing Arrangement (IA). The IA shall contain at least the information listed in annex A.

3.7.1.2 In addition to the IA, other information is needed to perform a Delta-DOR session. This can be found in:

a) Support Request (interfaces affected: IF-1, IF-2, and IF-3), defined in 6.2;

b) orbit ephemeris (IF-6);

c) correlation parameters (not mandatory, used primarily for validation purposes).

3.7.2 SUPPORT REQUEST PARAMETERS

The following parameters further described in 6.2 belong to the Support Request category:

a) Delta-DOR activity start/stop time;

b) spacecraft, quasar, station, mission, configuration, and request IDs;

c) start time and duration of each scan;

d) radio source to observe for each scan;

e) signal polarization;

f) receiver channelization including bandwidth and sample size (i.e., number of bits per sample);

g) spacecraft signal components to record;

h) last estimated transmitted non-coherent carrier frequency;

i) frequency of the DOR tones or of the subcarrier harmonics that will be used for the measurement;

j) expected signal flux/flux density for each radio source.

3.7.3 ORBIT EPHEMERIS ÌNFORMATION

The following information belongs to the orbit ephemeris category:

a) OEM file as defined in reference [2] of sufficient accuracy for antenna pointing during data acquisition;

b) OEM file as defined in reference [2] of sufficient accuracy for delay ambiguity resolution during data processing;

c) an estimate of the uncertainty in the OEM.

3.7.4 CORRELATION PARAMETERS

The following parameters belong to the correlation category:

a) total averaging time for the spacecraft signal;

b) coherent integration time for the spacecraft signal;

c) two-sided Phase Locked Loop (PLL) bandwidth (in Hz), if used, for each spacecraft tone;

d) total averaging time for the quasar signal;

e) coherent integration time for the quasar signal;

f) number of lags (for quasar correlation).

4 DESCRIPTION OF OPERATIONAL SCENARIOS

4.1 OVERVIEW

4.1.1 In this section, the four interoperability scenarios outlined in section 3 are described, using the following rules:

- each scenario is split in steps, respecting the timeline of events;
- all interfaces and categories of parameters to be exchanged at each step are mentioned.

Moreover, the following conventions are also adopted:

- *data processing* indicates the correlation of raw Delta-DOR data and generation of time delay observables;
- *Delta-DOR observable modeling* indicates reading of reduced Delta-DOR data and meteo data and computation of corresponding model values for the observables, i.e., generation of computed observables for use in orbit determination.

4.1.2 The IA described in annex A is a prerequisite to the execution of interagency Delta-DOR measurements. In particular the IA shall include time periods and number of occurrences for which service may be requested ('tracking schedule'). Instances of the Delta-DOR service, as required, are then requested based on the allowed tracking schedule. The information needed to request an instance of the Delta-DOR service is given in the 'Support Request' defined in 6.2.

4.2 SCENARIO 1

4.2.1 GENERAL

4.2.1.1 In scenario 1, following the conventions adopted in 3.2, the DUA is Agency 1, while the DCA and the DPA are Agency 2.

4.2.1.2 The scenario participating entities and tasks are:

a) tracked probe: DUA;

b) tracking stations: both stations operated by the DCA;

c) data processing: performed by the DCA/DPA;

d) data transfer:
   - OEM file from DUA to DCA,
   - meteo data from DCA to DUA,
   - reduced Delta-DOR data delivery by the DCA/DPA to the DUA;

e) Delta-DOR observable modeling: performed by the DUA.

4.2.2 OPERATIONAL SUPPORT PROCEDURE

The operational support procedure for scenario 1 shall be as follows:

a) The DUA provides the Support Request (through IF-1) to the DCA/DPA.

b) The DUA provides an OEM (through IF-6) to the DCA/DPA to be used for antenna pointing predicts and frequency predicts during data acquisition, and for correlation processing of the S/C data.

c) The DUA configures the spacecraft for DOR downlink (IF-2) at the scheduled times.

d) The DCA programs the detailed observation sequence, generates antenna pointing and frequency predicts, and configures the receiver as per the Support Request.

e) The DCA/DPA executes the observation and transfers both raw and meteo data to its facilities. For this data transfer step, in this scenario, either the native interfaces for the DCA or the interagency interfaces IF-4 and IF-5 may be used.

NOTE – Latitude is given here since data collection and processing are both native to the DCA/DPA.

f) The DPA correlates the data and provides reduced data (TDM, through IF-7) to the DUA.

g) The DCA provides the DUA with meteo data collected during the tracking (TDM, through IF-5).

h) The DUA makes use of the reduced data.

4.2.3 EXERCISED INTERFACES

The interfaces exercised in scenario 1 are:

a) IF-1: Support Request by the DUA to the DCA/DPA.

b) IF-2: Delta-DOR tone definition.

NOTE – The Support Request controls use of IF-2.

c) IF-3: quasar selection provided by the DUA to the DCA.

NOTE – The Support Request controls use of IF-3.

d) IF-5: meteo data to be provided by the DCA to the DUA.

e) IF-6: provision of OEM file by the DUA to the DCA/DPA.

f) IF-7: reduced data in the form of TDM files to be provided by the DPA to the DUA.

4.3 SCENARIO 2

4.3.1 GENERAL

4.3.1.1 In scenario 2, following the conventions adopted in 3.2, the DUA is Agency 1, while DCA 1 is Agency 1, DCA 2 is Agency 2 or Agency 3, and the DPA can be either Agency 1 or Agency 2.

4.3.1.2 The scenario participating entities and tasks are:

a) tracked probe: DUA;

b) tracking stations: one station operated by the DUA/DCA 1 and the other by DCA 2;

c) data processing: performed either by the DUA/DCA 1 or by DCA 2;

d) data transfer:

   – OEM file from DUA to DCA 2,

   – meteo data from DCA 2 to DUA;

   in case the DUA is the DPA:

   – exchange format raw Delta-DOR data from DCA 2 to DUA;

   in case DCA 2 is the DPA:

   – exchange format raw Delta-DOR data from DUA to DCA 2,

   – reduced Delta-DOR data delivery by DCA 2 to the DUA in the form of a TDM file;

e) Delta-DOR observable modeling: performed by the DUA.

4.3.2 OPERATIONAL SUPPORT PROCEDURE

The operational support procedure for scenario 2 shall be as follows:

a) The DUA provides the Support Request (through IF-1) to DCA 2.

b) The DUA provides an OEM (through IF-6) to DCA 2 to be used for antenna pointing predicts and frequency predicts during data acquisition, and, if DCA 2 is the DPA, for correlation processing of the S/C.

c) The DUA configures the spacecraft for DOR downlink (through IF-2) at the scheduled times.

d) The DUA/DCA 1 and DCA 2 program the detailed observation sequence, generate antenna pointing and frequency predicts, and configure the receiver as per the Support Request.

e) The DUA/DCA 1 and DCA 2 perform the observation.

f) DCA 2 transfers the meteo data collected at its station to the DUA (through IF-5).

g) If DCA 2 is the DPA:

   1) the DUA/DCA 1 transfers the exchange format raw Delta-DOR data collected at its station to DCA 2 (through IF-4);

   2) DCA 2 provides reduced Delta-DOR data (TDM, through IF-7) to the DUA.

h) If the DUA/DCA 1 is the DPA:

   1) DCA 2 transfers the exchange format raw Delta-DOR data collected at its station to the DUA (through IF-4).

i) The DUA makes use of the reduced data.

4.3.3 EXERCISED INTERFACES

The interfaces exercised in scenario 2 are:

a) IF-1: Support Request by the DUA to DCA 2.

b) IF-2: Delta-DOR tone definition.

NOTE – The Support Request controls use of IF-2.

c) IF-3: quasar selection by the DUA.

NOTE – The Support Request controls use of IF-3.

d) IF-4: in case the DUA is the DPA, provision of exchange format raw Delta-DOR data by DCA 2 to the DUA/DPA; in case DCA 2 is the DPA, provision of exchange format raw Delta-DOR data by the DUA to DCA 2/DPA.

e) IF-5: meteo data to be provided by DCA 2 to the DUA.

f) IF-6: provision of OEM file by the DUA to DCA 2.

g) IF-7: reduced data in the form of TDM files to be provided by DCA 2 to the DUA only if DCA 2 is the DPA.

4.4 SCENARIO 3

4.4.1 GENERAL

4.4.1.1 In scenario 3, following the conventions adopted in 3.2, the DUA is Agency 1, while DCAs are Agency 2 and Agency 3, and the DPA is again Agency 1.

4.4.1.2 The scenario participating entities and tasks are:

a) tracked probe: DUA;

b) tracking stations: one station operated by DCA 1 and the other by DCA 2;

c) data processing: performed by the DUA;

d) data transfer:

- OEM file from DUA to DCAs,
- meteo data from DCAs to DUA,
- exchange format raw Delta-DOR data from DCAs to DUA;

e) Delta-DOR observable modeling: performed by the DUA.

4.4.2 OPERATIONAL SUPPORT PROCEDURE

The operational support procedure for scenario 3 shall be as follows:

a) The DUA provides the Support Request (through IF-1) to both DCAs.

b) The DUA provides an OEM (through IF-6) to both DCAs to be used for antenna pointing predicts and frequency predicts during data acquisition.

c) The DUA configures the spacecraft for DOR downlink (through IF-2) at the scheduled times.

d) DCA 1 and DCA 2 program the detailed observation sequence, generate antenna pointing and frequency predicts, and configure the receiver as per the Support Request.

e) DCA 1 and DCA 2 perform the observation.

f) DCA 1 and DCA 2 transfer exchange format raw Delta-DOR data (through IF-4) and meteo data (through IF-5) collected at their stations to the DUA/DPA.

g) The DUA/DPA performs the correlation and makes use of the reduced data.

4.4.3 EXERCISED INTERFACES

The interfaces exercised in this scenario are:

a) IF-1: Support Request by the DUA to the DCAs.

b) IF-2: Delta-DOR tone definition.

NOTE – The Support Request controls use of IF-2.

c) IF-3: quasar selection by the DUA.

NOTE – The Support Request controls use of IF-3.

d) IF-4: provision of exchange format raw Delta-DOR data by the DCAs to the DUA.

e) IF-5: meteo data to be provided by the DCAs to the DUA.

f) IF-6: provision of OEM file by the DUA to the DCAs.

4.5 SCENARIO 4

4.5.1 GENERAL

4.5.1.1 In scenario 4, following the conventions adopted in 3.2, the DUA is Agency 1, while DCAs are Agency 2 and Agency 3, and the DPA is either Agency 2 or Agency 3.

4.5.1.2 The scenario participating entities and tasks are:

a) tracked probe: DUA;

b) tracking stations: one station operated by DCA 1 and the other by DCA 2;

c) data processing: the DPA could be either DCA 1 or DCA 2;

d) data transfer:

– OEM file from DUA to DCAs,

– meteo data from DCAs to DUA;

in case DCA 1 is the DPA:

– exchange format raw Delta-DOR data from DCA 2 to DCA 1/DPA;

in case DCA 2 is the DPA:

– exchange format raw Delta-DOR data from DCA 1 to DCA 2/DPA;

e) Delta-DOR observable modeling: performed by the DUA.

4.5.2 OPERATIONAL SUPPORT PROCEDURE

The operational support procedure for scenario 4 shall be as follows:

a) The DUA provides the Support Request (through IF-1) to both DCAs.

b) The DUA provides an OEM (IF-6) to be used for antenna pointing predicts and frequency predicts during data acquisition to both DCAs.

c) The DUA configures the spacecraft for DOR downlink (through IF-2) at the scheduled times.

d) DCA 1 and DCA 2 program the detailed observation sequence, generate antenna pointing and frequency predicts, and configure the receiver as per the Support Request.

e) DCA 1 and DCA 2 perform the observation.

f) DCA 1 and DCA 2 transfer meteo data to the DUA (through IF-5).

g) If DCA 1 is the DPA:

1) DCA 2 transfers the exchange format raw Delta-DOR data collected at its station to DCA 1/DPA (through IF-4);

2) DCA 1/DPA correlates the data and provides reduced data (TDM, through IF-7) to the DUA.

h) If DCA 2 is the DPA:

1) DCA 1 transfers the exchange format raw Delta-DOR data collected at its station to DCA 2/DPA (through IF-4);

2) DCA 2/DPA correlates the data and provides reduced data (TDM, through IF-7) to the DUA.

i) The DUA makes use of the reduced data.

4.5.3 EXERCISED INTERFACES

The interfaces exercised in scenario 4 are:

a) IF-1: Support Request by the DUA to the DCAs.

b) IF-2: Delta-DOR tone definition.

NOTE – The Support Request controls use of IF-2.

c) IF-3: quasar selection by the DUA.

NOTE – The Support Request controls use of IF-3.

d) IF-4: in case DCA 1 is the DPA, provision of exchange format raw Delta-DOR data by DCA 2 to DCA 1/DPA; in case DCA 2 is the DPA, provision of exchange format raw Delta-DOR data by DCA 1 to DCA 2/DPA.

e) IF-5: meteo data to be provided by both DCAs to the DUA.

f) IF-6: provision of OEM file by the DUA to the DCAs.

g) IF-7: reduced data in the form of a TDM file to be provided by the DPA to the DUA.

5 DESCRIPTION OF VALIDATION PROCESS

5.1 OVERVIEW

There are several ways for validating the capability of an agency to be incorporated in an existing Delta-DOR network. First of all, the agency joining the Delta-DOR network should already be equipped with the necessary validated infrastructure (reference [E1]). However, this cannot be considered as a sufficient step to be fully integrated in an operational network.

Following the description given in 3.5, three validation steps are here described.

Each step aims at validating part of the process (trajectory prediction and Delta-DOR observable modeling, data collection, and data processing) in order to reach complete interoperability. Each of the aforementioned is described in detail in the following subsections.

Each step is an independent case, and the steps can be undertaken in any order. In order to achieve a full interoperability, all of the steps must be successfully completed.

Quantitative criteria for the achieved validation level are covered in 5.5.

In order to make the process more effective, it should be performed using a spacecraft orbiting around a planet. Since the orbit of a planetary spacecraft can be estimated already with high precision using standard radiometric techniques such as integrated Doppler and ranging, the performance of the Delta-DOR system under test can be better characterized.

5.2 INTEROPERABILITY VALIDATION STEP 1—TRAJECTORY PREDICTION AND OBSERVABLE MODELING

5.2.1 GENERAL DESCRIPTION AND GOALS

5.2.1.1 In order to validate the interoperability process, one step is to test the navigation interfaces and related processing. Step 1 exercises all navigation interfaces in the form of OEM (reference [2]) and TDM files (reference [3]), consisting in the exchange of OEM for the pre-acquisition phase and of meteo and reduced data (i.e., the Delta-DOR observable) in the form of TDM files.

5.2.1.2 The Validating Agency (VA), which has already-proven capabilities of Delta-DOR interoperability, will provide both the DCA and DPA roles, from data acquisition to data processing. The Under Validation Agency (UVA) will test its capability to provide a predicted ephemeris (OEM file, IF-6 in figure 3-1) and to carry out Delta-DOR observable modeling using the reduced data (IF-7) and meteo data (IF-5) in TDM format.

5.2.1.3 The participating entities and tasks are:

a) Tracked probe: UVA.

If the probe belongs to the VA, the VA shall provide the UVA with the means to perform trajectory prediction and Delta-DOR observable modeling on the probe.

NOTE – It would be up to the VA to validate such capability before undertaking the Delta-DOR validation step under discussion.

b) Tracking stations: both stations operated by the VA.

c) Data processing: performed only by the VA.

d) Data transfer:

   – Delta-DOR reduced data delivery by the VA to the UVA in the form of a TDM file;

   – meteo data delivery by the VA to the UVA in the form of a TDM file;

   – OEM file delivery by the UVA to the VA.

e) Delta-DOR observable modeling: performed by the UVA.

5.2.2 VALIDATION PROCEDURE

The validation procedure shall be as follows:

a) The UVA provides the Support Request (through IF-1) to the VA.

   If the probe belongs to the VA, the VA shall provide the UVA with the relevant S/C parameters (as per annex A) so that the UVA can generate the Support Request.

b) The UVA provides the VA with an OEM file (through IF-6) of its spacecraft and related uncertainties to be used for antenna pointing during data acquisition, frequency predicts, and correlation processing.

   If the probe belongs to the VA, the VA shall provide the UVA with the probe state and relevant S/C model parameters so that the UVA can generate the OEM.

c) The VA programs the detailed observation sequence, generates antenna pointing and frequency predicts, and configures the receiver as per the Support Request.

d) The VA executes the observation and transfers both raw and meteo data to its facilities. For this data transfer step, in this scenario, either the native interfaces for the VA or the interagency interfaces IF-4 and IF-5 may be used.

NOTE – Latitude is given here since data collection and processing are both native to the VA.

e) The VA correlates the data and provides reduced data (TDM, through IF-7) to the UVA.

f) The VA provides the UVA with meteo data collected during the tracking (TDM, through IF-5).

g) The UVA performs the Delta-DOR observable modeling.

h) The VA checks the computed observables provided by the UVA.

5.2.3 VALIDATED INTERFACES

The interfaces validated in this step are:

a) IF-1: provision of the Support Request by the UVA to the VA.

b) IF-2: Delta-DOR tone definition.

NOTE – The Support Request controls use of IF-2.

c) IF-3: quasar selection.

NOTE – The Support Request controls use of IF-3.

d) IF-5: provision of meteo data of both observing stations by the VA to the UVA.

e) IF-6: provision of OEM file by the UVA to the VA.

f) IF-7: provision of reduced Delta-DOR data by the VA to the UVA.

5.2.4 ACHIEVEMENTS

With interoperability validation step 1 the following are achieved:

a) validation of the UVA navigation products in the pre-acquisition phase (i.e., OEM files).

b) validation of the UVA capabilities to read and model Delta-DOR navigation products (i.e., TDM files) within the orbit determination phase.

c) The UVA can now provide the role of DUA.

5.3 INTEROPERABILITY VALIDATION STEP 2—DATA COLLECTION

5.3.1 GENERAL DESCRIPTION AND GOALS

5.3.1.1 Step 2 addresses the point of raw data exchange and validation of the raw data acquisition process by the UVA.

5.3.1.2 The participating entities and tasks are:

a) Tracked probe: VA.

If the probe belongs to the UVA, the UVA shall provide the VA with the means to perform trajectory prediction and Delta-DOR observable modeling on the probe.

b) Tracking stations: one station operated by the VA, one by the UVA (or both operated by the UVA).

c) Data transfer: exchange format raw Delta-DOR and meteo data transfer from the UVA to the VA.

d) Data processing: performed by the VA.

e) Delta-DOR observable modeling: performed by the VA.

5.3.2 VALIDATION PROCEDURE

The validation procedure shall be as follows:

a) The VA provides the Support Request (through IF-1) to the UVA.

   If the probe belongs to the UVA, the UVA shall provide the VA with the relevant S/C parameters (as per annex A) so that the VA can generate the Support Request.

b) The VA provides the UVA with an OEM file (through IF-6) of its spacecraft and related uncertainties to be used for antenna pointing predicts and frequency predicts during data acquisition, and for the correlation process.

   If the probe belongs to the UVA, the UVA shall provide the VA with the probe state and relevant S/C model parameters so that the VA can generate the OEM.

c) The UVA and the VA (or the UVA only, in case both stations belong to the UVA) program the detailed observation sequence, generate antenna pointing and frequency predicts, and configure the receiver as per the Support Request.

d) The UVA and the VA (or the UVA only, in case both stations belong to the UVA) execute the observation.

e) The UVA transfers the exchange format raw Delta-DOR data (through IF-4) and the meteo data (through IF-5) collected at its station(s) to the VA.

f) The VA performs the correlation process.

g) The VA performs the observable modeling and validates the results.

5.3.3 VALIDATED INTERFACES

The interfaces validated in this step are:

a) IF-1: provision of the Support Request by the VA to the UVA.

b) IF-2: Delta-DOR tone definition.

NOTE – The Support Request controls use of IF-2.

c) IF-3: quasar selection.

NOTE – The Support Request controls use of IF-3.

d) IF-4: provision of exchange format raw Delta-DOR data by the UVA to the VA.

e) IF-5: provision of meteo data by the UVA to the VA.

5.3.4 ACHIEVEMENTS

With interoperability validation step 2 the following are achieved:

a) validation of the UVA capability to make use of the navigation products generated by the VA (i.e., OEM files).

b) validation of exchange format raw Delta-DOR and meteo data acquisition of the UVA.

c) The UVA can now provide the role of DCA.

5.4 INTEROPERABILITY VALIDATION STEP 3—DATA PROCESSING

5.4.1 GENERAL DESCRIPTION AND GOALS

5.4.1.1 Step 3 addresses the correlation process performed by the UVA.

5.4.1.2 The participating entities and tasks are:

a) Tracked probe: VA.

If the probe belongs to the UVA, the UVA shall provide the VA with the means to perform trajectory prediction and Delta-DOR observable modeling on the probe.

b) Tracking stations: both operated by the VA.

c) First data transfer: exchange format raw Delta-DOR data from the VA to the UVA.

d) Data processing: data correlation performed by the UVA.

e) Second data transfer: reduced Delta-DOR data transfer from the UVA to the VA.

5.4.2 VALIDATION PROCEDURE

The validation procedure shall be as follows:

a) The VA provides the Support Request (through IF-1) to the UVA.

If the probe belongs to the UVA, the UVA shall provide the VA with the relevant S/C parameters (as per annex A) so that the VA can generate the Support Request.

b) The VA provides the UVA with an OEM file (through IF-6) of its spacecraft and related uncertainties to be used in the correlation process.

   If the probe belongs to the UVA, the UVA shall provide the VA with the probe state and relevant S/C model parameters so that the VA can generate the OEM.

c) The VA programs the detailed observation sequence, generates antenna pointing and frequency predicts, and configures the receiver as per the Support Request.

d) The VA executes the observation.

e) The VA transfers exchange format raw Delta-DOR data (through IF-4) collected at its tracking stations to the UVA.

f) The UVA performs the data processing. Discussion on the correlation parameters in 3.7.4 may be required as part of the validation process. The VA also performs data processing to be able to check the results from the UVA.

g) The UVA transfers the reduced Delta-DOR data to the VA (through IF-7).

h) The VA compares the reduced data to its own values, from data processing performed at the VA, and validates the results.

5.4.3 VALIDATED INTERFACES

The interfaces validated in this step are:

a) IF-1: provision of the Support Request by the VA to the UVA.

b) IF-2: Delta-DOR tone definition.

NOTE – The Support Request controls use of IF-2.

c) IF-3: quasar selection.

NOTE – The Support Request controls use of IF-3.

d) IF-4: provision of exchange format raw Delta-DOR data by the VA to the UVA.

e) IF-6: provision of OEM file by the VA to the UVA.

f) IF-7: provision of reduced Delta-DOR data by the UVA to the VA.

5.4.4 ACHIEVEMENTS

With interoperability validation step 3 the following are achieved:

a) validation of the UVA capability to make use of the navigation products (i.e., OEM files) generated by the VA in the data processing.

b) validation of data correlation capability of the UVA.

c) The UVA can now provide the role of DPA.

5.5 QUANTITATIVE VALIDATION CRITERIA

5.5.1 OVERVIEW

This subsection addresses some quantitative criteria to be adopted in the validation process.

The only cases treated here are the raw Delta-DOR data collection and the Delta-DOR data processing, since the data usage normally pertains to orbit determination and is outside the scope of the present book.

Both data collection and data processing functions can be validated only by performing the data processing. This step can be performed either by the VA (with or without the participation of the UVA) in case of the validation of the data collection capability and needs to be performed by both VA and UVA in case of data processing validation.

5.5.2 QUANTITATIVE VALIDATION FOR DATA COLLECTION

5.5.2.1 For quantitative validation for data collection, a goal is first set for the level of accuracy to which validation will be done. Agencies agree on a plan and schedule to record data for the purpose of validation. There must be a plan to acquire data for which the 'truth' of the data can be independently established to a level that is better than the validation accuracy goal. Observations must also be planned so that random errors will be less than the accuracy goal. The estimation of such random error contributors are described in reference [E1]. The validation setup should act on the parameters that control the magnitude of the random errors, also described in reference [E1].

5.5.2.2 Typical methods to establish 'truth' of recorded data include

a) recording on two similar baselines, the first of which is already validated, and comparing results between baselines to validate the second baseline;

b) observing a spacecraft such as an orbiter at Mars (or other planets) that has a very well known a-priori ephemeris (e.g., current Mars orbiters can have positions known to sub-nanoradian accuracy and hence could be used to validate a Delta-DOR data collection or processing to the nanoradian level) and inspecting Delta-DOR measurement residuals to validate the new data collection asset.

5.5.2.3 When two similar baselines are compared, the time delay observables cannot be directly compared. Residuals formed by subtracting a model from the observables for each baseline must be used instead. If the two baselines are very nearly the same (e.g., nearby

antennas at one end of the baseline and a common antenna at the other end of the baseline) then a low-fidelity model will suffice. But if the baselines have significant difference (e.g., in orientation, length) then a high-fidelity model including media calibration (e.g., from Flight Dynamics) must be used. Also, validation to the highest level of accuracy (i.e., a few nanoradians) will always require high-fidelity models.

5.5.2.4 When data for two similar baselines are compared, one or more Delta-DOR points are formed for each data set. Residuals are formed for Delta-DOR points from known baseline 1 (R11, R12, R13, …) and for the to be validated baseline 2 (R21, R22, R23, …). The comparison measure C is:

$$C = \text{sqrt} \{ [(R21-R11)^2 + (R22-R12)^2 + (R23-R13)^2 + \ldots]/N \}$$

where N is the number of Delta-DOR points.

Such measurement must finally be compared with the accuracy goal set up before the validation exercise.

5.5.2.5 When data for a single new baseline is being validated, Delta-DOR residuals must be calculated using a well-known spacecraft ephemeris and high-fidelity models including media calibration. If residuals are denoted as R1, R2, R3, …, then the comparison measure is simply

$$C = \text{sqrt} \{ [(R1)^2 + (R2)^2 + (R3)^2 + \ldots]/N \}$$

where N is the number of Delta-DOR points.

Such measurement must finally be compared with the accuracy goal set up before the validation exercise.

5.5.2.6 At least several successful passes (with multiple Delta-DOR points each) are expected so that comparison statistics can be acquired to establish accuracy of the new data collection asset.

5.5.3 QUANTITATIVE VALIDATION FOR DATA PROCESSING

5.5.3.1 For quantitative validation for data processing, again, a goal is set for the level of accuracy to which validation will be done. A single common data set is provided to two correlator facilities, the first of which is already validated. The random errors for the data set must be lower than the validation accuracy goal (methodologies to estimate random errors and parameters that control their magnitude are described in reference [E1]. The correlator outputs are compared to validate the second correlator facility.

If each data-processing software application can output time-delay observables at agreed common time epochs, then these observables may be compared directly. The measure of comparison would be the root-mean-square of the observable differences. A bias B may be expected and is not an issue since it would completely cancel in the later spacecraft minus

quasar differencing. Such bias may be calculated by averaging the differences between observables. If the delays at times t1, t2, t3, … are given by d11, d12, d13, … at correlator 1, and the delays are given by d21, d22, d23, … at correlator 2, the bias B is calculated as

$$B = [(d21-d11) + (d22-d12) + (d23-d13) + \dots]/N$$

where N is the number of time delays (scans) being compared.

The comparison measure C would be

$$C = \mathrm{sqrt} \{ [(d21-d11-B)^2 + (d22-d12-B)^2 + (d23-d13-B)^2 + \dots]/N \}$$

where N is the number of time delays (scans) being compared.

NOTE – For this case the comparison is of delay observables for individual radio source scans, and not for Delta-DOR.

Such measurement must finally be compared with the accuracy goal set up before the validation exercise.

5.5.3.2 If each data-processing software application cannot output time delay observables at agreed common time epochs, then these observables cannot be compared directly. Observables are obtained for each correlator at time epochs that agree as close as possible. A high-fidelity model is then subtracted from each observable. The delay residuals can be now compared as above in place of the total delays. The measure of comparison would be the root-mean-square of the residual observable differences.

Such measurement must finally be compared with the accuracy goal set up before the validation exercise.

6 INTERAGENCY DATA EXCHANGE PRODUCTS AND PROCEDURES

6.1 GENERAL

6.1.1 In order to support Delta-DOR interoperability, it is necessary to transfer data products between agencies. Specifications for those data products are:

a) Delta-DOR support request exchange specifications, described in 6.2;

b) OEM exchange specifications, described in 6.3;

c) RDEF transfer/exchange specifications (if any), described in 6.4;

d) meteo data (TDM) exchange specifications, described in 6.5;

e) reduced Delta-DOR data (TDM) transfer/exchange specifications, described in 6.6.

6.1.2 Each participating agency shall agree upon a data transfer strategy for the data products defined in 6.1.1. The strategy shall include the definition of suitable transfer protocols, source machines, and repository machines.

6.1.3 The natural radio sources used for Delta-DOR operation should be selected from the calibrated sources defined in the SANA Quasar registry (reference [5]).

6.1.4 The agencies, their service provider sites, points of contact, antennas, and spacecraft should all be registered in the relevant SANA registries (references [7], [8], [9], [10], and [11]).

6.2 DELTA-DOR SUPPORT REQUEST MESSAGE EXCHANGE SPECIFICATIONS

6.2.1 GENERAL

6.2.1.1 The Delta-DOR support request shall be limited to the description of the data format and the parameters needed to define a Delta-DOR measurement session. These include all parameters in 3.7.2.

6.2.1.2 The support request shall consist of two separate products: the DDOR Ground Observations Event Sequence and the DDOR Configuration Profile.

6.2.1.3 All parameters in the Support Request are mandatory and the Support Request shall completely define the Delta-DOR session.

6.2.1.4 The Support Request shall specify only existing capabilities within a network (reference [E1] provides description of current capabilities for NASA/JAXA and ESA Delta-DOR systems).

6.2.1.5 The Support Request shall be made available to the Agency(/ies) performing the measurement with sufficient lead time (defined in the IA—see annex A) in order to properly plan and configure for the measurement.

NOTE – Normally a few DDOR Configuration Profiles are provided ahead of time for each mission and do not change often.

6.2.1.5.1 A DDOR Ground Observations Event Sequence shall be provided for each Delta-DOR session and shall reference the appropriate DDOR Configuration Profile.

NOTE – The mechanism for Support Request exchange is defined in the IA (see annex A).

6.2.2 DDOR GROUND OBSERVATION EVENT SEQUENCE PARAMETER DEFINITION

The parameters in the DDOR Ground Observation Event Sequence shall be those defined in table 6-1.

NOTES

1 All times are UTC Earth receive time.

2 The parameters defined in table 6-1 for issue 2 of this Recommended Practice differ in definition and number from those defined in issue 1; in particular, many new parameters have been defined in the current issue. For that reason implementations based on the original issue of this document would not be compatible with implementations based on this issue, and vice versa. Because there are no known implementations based on issue 1, however, no problem with incompatibility is foreseen, as future implementations will follow the current definitions.

Table 6-1: Definition of Delta-DOR Ground Observation Event Sequence Parameters

Item Name	Item Description	Format	Units/Precision/Range
The first four items are the header			
RequestId	Issue date (ID) of the event sequence	YYYY-DDD **T**HH:MM:SS	UTC year, day of the year, hour/minute/second, precision=1 s, Time format as per reference [6], ASCII time code B
FormatVersion	File format version	Integer	Positive integer Current version is 1

Item Name	**Item Description**	**Format**	**Units/Precision/Range**
orginatingOrganization	Originating Organization	ASCII	From 'Name' field in the CCSDS Organizations registry (reference [11])
MissionId	Name of spacecraft requesting the service	ASCII	From 'Spacecraft Abbreviation' field of the CCSDS Spacecraft Identifiers registry (reference [9])
This is the start of the event sequence for a session. All items below repeat as a group for each session.			
ddorConfigProfileId	DDOR Configuration Profile (ID) to be used	ASCII	ID of an existing DDOR Configuration Profile
The following four items are referred to as the Spacecraft Table. They repeat for each spacecraft to be observed.			
ScIndex	Internal index to this spacecraft	4 ASCII characters	SC01, SC02, …
ScId	Spacecraft name	ASCII	From 'Spacecraft Abbreviation' field of the CCSDS Spacecraft Identifiers registry (reference [9])
DorOn	Start time for reception of spacecraft DOR tones	YYYY-DDD **T**HH:MM:SS	UTC year, day of the year, hour/minute/second, precision=1 s; Time format as per reference [6], ASCII time code B
DorOff	End time for reception of spacecraft DOR tones	YYYY-DDD **T**HH:MM:SS	UTC year, day of the year, hour/minute/second, precision=1 s Time format as per reference [6], ASCII time code B
The following three items are referred to as the Quasar Table. They repeat for each quasar to be observed.			
QuIndex	Internal index to this quasar	4 ASCII characters	QU01, QU02, …

Item Name	**Item Description**	**Format**	**Units/Precision/Range**
QuId	Quasar name	ASCII	From 'Name' field of the CCSDS quasar registry [5]
QuFlux	Received flux density of quasar	Decimal notation	Jy
The following three items are referred to as the Station Table. They repeat for each tracking station.			
TrkStnId	Station ID, given as <site name>-<aperture name>	ASCII	From 'Site Name Abbreviation' field and 'Aperture Name Abbreviation' field of the CCSDS Service Sites and Apertures registry (reference [8])
TrackStart	DDOR Session start time	YYYY-DDD **T**HH:MM:SS	UTC year, day of the year, hour/minute/second, precision=1 s Time format as per reference [6], ASCII time code B
TrackEnd	DDOR Session end time	YYYY-DDD **T**HH:MM:SS	UTC year, day of the year, hour/minute/second, precision=1 s Time format as per reference [6], ASCII time code B
DdorEpoch	Begin time for DDOR recording activity	YYYY-DDD **T**HH:MM:SS	UTC year, day of the year, hour/minute/second, precision=1 s Time format as per reference [6], ASCII time code B
The following four items are referred to as the Scan Table. They repeat for each source to be observed.			
ScanNum	Scan number	Integer	Positive integer, consecutive starting with 1

Item Name	Item Description	Format	Units/Precision/Range
ScanSource	Internal index to this source	4 ASCII characters	From either QuIndex list in the Quasar Table or ScIndex list in the Spacecraft Table
ScanStart	Scan start time	HH:MM:SS	hour/minute/second, time past DDOR Epoch
Duration	Scan duration	HH:MM:SS	hour/minute/second

6.2.3 DDOR GROUND OBSERVATIONS SEQUENCE SYNTAX

6.2.3.1 A DDOR Ground Observations Event Sequence file begins with the line

```
$ddorGroundObservationsEventSequence
```

6.2.3.2 A Ground Observations Event Sequence may provide inputs for a single Delta-DOR session or for several Delta-DOR sessions over a time span.

6.2.3.3 The first four three items in table 6-1 appear once only at the start of the event sequence. The remaining items as a group, are repeated for each Delta-DOR session.

6.2.3.4 Embedded blanks within a parameter value are not allowed. They should be replaced with the underscore character '_'.

6.2.3.5 The special lines $START and $END appear at the beginning and end of the items for each session. The special line $$EOF appears at the very end. (See annex C for examples.)

6.2.3.6 The Ground Observations Event Sequence consists of lines of the form

Parameter = Value ;

where 'Parameter' is one of the items defined in Table 6-1 that is not in a grouped table. The line for a single parameter terminates with a semi-colon.

The values of items in the Spacecraft Table are preceded by a single line to identify the values to follow:

```
ScIndex____ScId____DorOn____DorOff =
```

For each spacecraft, the four corresponding values are presented in a single line using one or more spaces as a delimeter:

Value1 Value2 Value3 Value4 (repeats for each spacecraft)

A single line with a semi-colon denotes the end of the Spacecraft Table.

The values of items in the Quasar Table are preceded by a single line to identify the values to follow:

```
QuIndex____QuId____QuFlux =
```

For each quasar, the three corresponding values are presented in a single line using one or more spaces as a delimeter:

Value1 Value2 Value3 (repeats for each quasar)

A single line with a semi-colon denotes the end of the Quasar Table.

The values of items in the Station Table are preceded by a single line to identify the values to follow:

```
TrkStnId____TrackStart____TrackEnd =
```

For each station, the three corresponding values are presented in a single line using one or more spaces as a delimeter:

Value1 Value2 Value3 (repeats for each station)

A single line with a semi-colon denotes the end of the Station Table.

The values of items in the Scan Table are preceded by a single line to identify the values to follow:

```
ScanNum____ScanSource____ScanStart____Duration =
```

For each scan, the four corresponding values are presented in a single line using one or more spaces as a delimeter:

Value1 Value2 Value3 Value4 (repeats for each scan)

A single line with a semi-colon denotes the end of the Scan Table.

;

Comments may appear at any position. Any description after a hash mark (#) on a line is ignored as a comment

6.2.4 DDOR GROUND OBSERVATIONS EVENT SEQUENCE FILE NAMING CONVENTIONS

The DDOR Ground Observations Event Sequence is provided in text format. The naming convention to be followed is:

<ScId> _DDOR_YYYY1_DDD1_YYYY2_DDD2_vN.des

where

<ScId> is from 'Spacecraft Abbreviation' field of the CCSDS Spacecraft Identifiers registry (reference [9])

YYYY1 = 4-digit year for initial time of first session

DDD1 = 3-digit day of year for initial time of first session

YYYY2 = 4-digit year for final time of last session

DDD2 = 3-digit day of year for final time of last session

N = version for this issue of the Support Request (e.g. 1 or 2 or 3 or …)

The suffix '.des' identifies the file as DDOR Ground Observations Event Sequence.

6.2.5 DDOR CONFIGURATION PROFILE PARAMETER DEFINITION

The parameters in the Support Request are defined in table 6-2.

Table 6-2: Definition of DDOR Configuration Profile Parameters

Item Name	Item Description	Format	Units/Precision/Range
ddorConfigProfileId	DDOR Configuration Profile (ID)	ASCII	ID of this DDOR Configuration Profile
The following five items are referred to as the Spacecraft Configuration Table. They repeat for each spacecraft that the station is being configured to record.			
ScIndex	Internal index to this spacecraft	4 ASCII characters	SC01, SC02, …
ScId	Spacecraft name	ASCII	From 'Spacecraft Abbreviation' field of the CCSDS Spacecraft Identifiers registry (reference [9])

Item Name	Item Description	Format	Units/Precision/Range
ScFlux	Spacecraft received flux, normalized to 1 AU distance	Decimal notation	dBm/m^2
Pol	Spacecraft received signal polarization	3 ASCII characters	For example, RCP or LCP
Carrier	Spacecraft carrier transmitter frequency	Decimal notation	Radio Frequency, Hz
ScSampleRate	Spacecraft recording channel sampling rate	Integer	Hz
ScSampleSize	Spacecraft recording channel number of bits per sample	Integer	bits/sample
QuSampleRate	Quasar recording channel sampling rate	Integer	Hz
QuSampleSize	Quasar recording channel number of bits per sample	Integer	bits/sample
The following eight items are referred to as the Channel Table. They repeat for each frequency channel to record.			
ChanNum	Logical recording channel number	Integer	Positive integer, consecutive starting with 1
ScAssoc	Internal index of spacecraft to associate with recording channel	4 ASCII characters	From ScIndex list in Spacecraft Configuration Table
SigComp	Spacecraft signal component	Up to 7 ASCII characters	CARRIER or SUBCAR or DORTONE
DeltaFlux	Spacecraft signal component received flux	Decimal notation	dB, relative to ScFlux
CohFlg	Coherency flag	1 ASCII character	T if signal component is a submultiple of the carrier (i.e. DOR Tone); F if signal component is an independent subcarrier
DorMult	DOR tone multiplier; Only used if CohFlg is 'T'	Either ratio of two integers or decimal notation	e.g. 1/440 or 0.00056

Item Name	Item Description	Format	Units/Precision/Range
Subcar	Subcarrier frequency; Only used if CohFlg is 'F'	Decimal notation	Hz
Harm	Harmonic number for either DOR tone or subcarrier; Used in both cases in which CohFlg is either 'T' or 'F'.	Integer	Positive or negative integer; =0 for Carrier

6.2.6 DDOR CONFIGURATION PROFILE SYNTAX

6.2.6.1 A DDOR Configuration Profile file begins with line

```
$ddorConfigurationProfile
```

and ends with the line

$END

6.2.6.2 Embedded blanks within a parameter value are not allowed. They should be replaced with the underscore character '_'.

6.2.6.3 The configuration profile consists of lines of the form

Parameter = Value ;

where 'Parameter' is one of the items defined in Table 6-2 that is not in a grouped table. The line for a single parameter terminates with a semi-colon.

The values of items in the Spacecraft Configuration Table are preceded by a single line to identify the values to follow:

```
ScIndex____ScId____ScFlux____Pol____Carrier =
```

For each spacecraft, the five corresponding values are presented in a single line using one or more spaces as a delimeter:

Value1 Value2 Value3 Value4 Value5 (repeats for each spacecraft)

A single line with a semi-colon denotes the end of the Spacecraft Configuration Table.

The values of items in the Channel Table are preceded by a single line to identify the values to follow:

```
ChanNum____ScAssoc____SigComp____DeltaFlux____CohFlg____DorMult____Subcar____Harm =
```

For each channel, the eight corresponding values are presented in a single line using one or more spaces as a delimeter:

Value1 Value2 Value3 Value4 Value5 Value6 Value7 Value8 (repeats for each channel)

A single line with a semi-colon denotes the end of the Channel Table.

Comments may appear at any position. Any description after a hash mark (#) on a line is ignored as a comment.

6.2.7 DDOR CONFIGURATION PROFILE FILE NAMING CONVENTION

The DDOR Configuration Profile is provided as an ASCII text formatted file. The naming convention to be followed is:

<ScId>_<ddorConfigProfileId>.dcp

where

<ScId> is from 'Spacecraft Abbreviation' field of the CCSDS Spacecraft Identifiers registry (reference [9])

<ddorConfigProfileId> is the value of this parameter in the file

The suffix .dcp identifies the file as a DDOR Configuration Profile.

6.3 ORBITAL EPHEMERIS FILES EXCHANGE SPECIFICATIONS

6.3.1 GENERAL

The orbital ephemeris data of the spacecraft to be tracked (IF-6) are used for antenna pointing predicts and frequency predicts during data acquisition, prior to data correlation. Therefore they shall be transferred from the DUA to the DCA(s) (see definitions in 3.2) prior to the execution of the planned Delta-DOR observation.

6.3.2 ORBITAL EPHEMERIS DATA EXCHANGE

The orbital information shall be transferred by means of OEM files, defined in reference [2].

6.3.3 DATA TRANSFER REQUIREMENTS

OEM files shall be delivered by the DUA to the DCA on a regular basis, to be agreed upon by the two agencies in the frame of the Implementing Arrangement.

6.4 RAW DELTA-DOR DATA TRANSFER/EXCHANGE SPECIFICATIONS

6.4.1 GENERAL

Raw Delta-DOR and meteo data exchanges are shown as 'IF-4' and 'IF-5' in figure 3-1. For an interoperable interagency Delta-DOR session, a raw Delta-DOR data exchange format is defined (RDEF, reference [4]) and shall be used when performing cross-agency operations. In such cases, each agency shall therefore translate its data to the exchange format before transferring data to the processing site. Since each agency has developed its own hardware and software for data collection there is no CCSDS Recommended Standard for native Delta-DOR data format exchange aside from the RDEF.

NOTE – The processing site may be located at another agency.

6.4.2 RAW DELTA-DOR DATA EXCHANGE

In case ground stations of two agencies are used in a Delta-DOR recording session, transfer of the exchange format raw data from both sites to the chosen correlator facility is necessary. In case different hardware is used by two agencies, the sampling format for native raw data may not be identical. However, if similar channel positions and sampling rates are agreed upon and used, then it is possible to re-sample one data stream to make it fully compatible with the second stream. Further, data with compatible samples may be converted from the format used by one DCA into the format required by the DPA. The re-sampling and re-formatting shall be done by the DCA before raw data transfer. Users should be aware that re-sampling may reduce effective signal-to-noise ratio of the data.

The exchange format raw Delta-DOR data file (or files) shall contain ancillary information to completely describe the recording session, as well as the primitive samples of the spacecraft and quasar signals.

NOTE – The exchange format for raw Delta-DOR data is described in reference [4].

6.4.3 DATA TRANSFER REQUIREMENTS

Raw Delta-DOR data exchange of necessity involves transfer of a large volume of data. Historically, VLBI experimenters have exchanged data by shipping tapes or disks from one site to another. On the other hand, measurement systems developed for Delta-DOR have relied on electronic file transfer. Data network connections are needed from each station to the correlator facility. Because of the large data volume expected, the number of transfer steps should be kept to a minimum. The necessary transfer rate that must be provided will depend on the data volume and the allowed latency for delivery of the reduced data.

As an example, 12 Gbytes of data may be transferred in 9 hr at a rate of 3 Mbits/sec. This typical data volume and latency can be supported by two T1 lines for a single transfer step.

The data volume and the required latency must be taken into account when sizing bandwidth requirements. Network connections, network bandwidth, suitable transfer protocols, source machines, and repository machines must all be provided and agreed upon.

6.5 METEO DATA EXCHANGE SPECIFICATIONS

6.5.1 GENERAL

The meteo data collected at the stations during the Delta-DOR tracking (IF-5) are used to develop path delay calibrations for signal transmissions through the Earth's troposphere and ionosphere. These calibrations are then used in the navigation system as part of the observable model. Therefore they shall be exchanged immediately after the execution of the planned Delta-DOR observation.

6.5.2 METEO DATA EXCHANGE

The meteo data information shall be exchanged by means of Tracking Data Message (TDM) files, described in reference [3].

6.5.3 DATA TRANSFER REQUIREMENTS

TDM files shall be delivered by the DCAs (see definitions in 3.2) to the DUA after each Delta-DOR tracking session.

6.6 REDUCED DELTA-DOR DATA TRANSFER/EXCHANGE SPECIFICATIONS

6.6.1 GENERAL

Reduced Delta-DOR data transfer is shown as IF-7 in figure 3-1. Once the raw data have been collected, transferred, and correlated, the Delta-DOR observables shall be delivered to the spacecraft navigation team for use in the process of orbit determination.

6.6.2 REDUCED DELTA-DOR DATA EXCHANGE

The reduced Delta-DOR data information shall be transferred by means of TDM files, defined in reference [3].

The means and latency of data transfer shall be agreed upon by the specific exchange participants and documented in the Implementing Arrangement.

ANNEX A

ITEMS FOR AN IMPLEMENTING ARRANGEMENT (IA)

(NORMATIVE)

In several places in this document there are references to items which are needed to enable the general interagency Delta-DOR support and are not expected to change from one measurement session to the next. These items should be specified in an Implementing Arrangement (IA) between agencies participating in a Delta-DOR campaign, if they are applicable to the particular operation. This annex compiles those items into a single location. On the other hand, items that may change from session to session (e.g. start time) are provided in the Support Request (6.2).

The IA should be jointly produced by both agencies participating in a cross-support activity involving the collection, analysis, and transfer of tracking data.

It might be feasible for participating agencies to have a generic baseline IA ('standard service provider IA') that specifies mission-/spacecraft-independent entities on the interface, e.g., those associated with the agency's ground antennas (axis offsets, station locations, side motions, reference frame, epoch, supported frequency bands, etc.). Then smaller IAs could be used for the mission-/spacecraft-specific arrangements.

The following table lists the items that shall be covered in an IA (or equivalent document), along with where they are discussed in the text.

Item	Section
1. Identification of roles of participating agencies	3
2. ID for mission and spacecraft to be supported	3, 6.2
3. Parameters to allow modeling of spacecraft observables; only needed if a second Agency will be using data (i.e., validating orbit determination) for a spacecraft belonging to another Agency	5
4. Agreed schedule including number of passes, baseline or station IDs, network ID, dates and times (see NOTE)	3, 6.2
5. Expected Quasar ID(s) to be used during the tracking campaign for preparation purposes (the list in the IA should be a preliminary list and can be updated prior/during the cross-support campaign itself)	
6. Support Request delivery lead time requirement	6.2
7. Delivery time for reduced and/or raw Delta-DOR data (required data delivery time for each phase of the mission)	6.6

Item	Section
8. Identification of Delta-DOR coordinator (i.e., contact point for measurement execution) for each agency	N/A
9. Spacecraft downlink signal structure, polarization, and nominal transmit frequency for advance planning and station configuration definition	6.2
10. Specific modulation format, DOR tone frequencies, and power levels selected for each spacecraft for advance planning and station configuration definition	6.2
11. Ground station configuration ID to be used; only needed if Agencies agree on standard configurations	
12. Expected Delta-DOR observable accuracy (i.e., a-priori random error)	reference [E1]
13. Transfer protocols and data repositories needed for each data type transfer	6
14. Specific information, security, interoperability provisions that may apply between agencies involved in the Delta-DOR campaign	6, annex B
NOTE – The schedule may be initially defined as a profile of resource usage and then become more detailed and specific.	

ANNEX B

SECURITY, SANA, AND PATENT CONSIDERATIONS

(INFORMATIVE)

B1 SECURITY CONSIDERATIONS

B1.1 OVERVIEW

This annex presents the results of an analysis of security considerations applied to the technologies specified in this Recommended Practice.

B1.2 CONSEQUENCES OF NOT APPLYING SECURITY TO THE TECHNOLOGY

The consequences of not applying security to the systems and networks on which this Recommended Practice is implemented could include potential loss, corruption, and theft of data.

B1.3 POTENTIAL THREATS AND ATTACK SCENARIOS

Potential threats or attack scenarios include, but are not limited to, (a) unauthorized access to the programs/processes that generate and interpret the messages, and (b) unauthorized access to the messages during transmission between exchange partners. Protection from unauthorized access during transmission is especially important if the mission utilizes open ground networks such as the Internet to provide ground station connectivity for the exchange of data. It is strongly recommended that potential threats or attack scenarios applicable to the systems and networks on which this Recommended Practice is implemented be addressed by the management of those systems and networks and the utilization of adequate authentication, suitable protocols, and secured interfaces for the exchange of this information.

B1.4 SECURITY CONCERNS RELATED TO THIS RECOMMENDED PRACTICE

B1.4.1 Data Privacy

Privacy of data formatted in compliance with the specifications of this Recommended Practice should be assured by the systems and networks on which this Recommended Practice is implemented.

B1.4.2 Data Integrity

Integrity of data formatted in compliance with the specifications of this Recommended Practice should be assured by the systems and networks on which this Recommended Practice is implemented.

B1.4.3 Authentication of Communicating Entities

Authentication of communicating entities involved in the transport of data which complies with the specifications of this Recommended Practice should be provided by the systems and networks on which this Recommended Practice is implemented.

B1.4.4 Data Transfer between Communicating Entities

The transfer of data formatted in compliance with this Recommended Practice between communicating entities should be accomplished via secure mechanisms approved by the IT Security functionaries of exchange participants.

B1.4.5 Control of Access to Resources

This Recommended Practice assumes that control of access to resources will be managed by the systems upon which provider formatting and recipient processing are performed.

B1.4.6 Auditing of Resource Usage

Auditing of resource usage should be handled by the management of systems and networks on which this Recommended Practice is implemented.

B1.5 UNAUTHORISED ACCESS

Unauthorized access to the programs/processes that generate and interpret the messages should be prohibited in order to minimize potential threats and attack scenarios.

B1.6 DATA SECURITY IMPLEMENTATION SPECIFICS

Specific information-security interoperability provisions that may apply between agencies involved in an exchange of data formatted in compliance with this Recommended Practice should be specified in an ICD.

B2 SANA CONSIDERATIONS

B2.1 GENERAL

The recommendations of this document rely on the SANA registries described below. New assignments in these registries, in conformance with the policies identified, will be available at the SANA registry Web site: http://sanaregistry.org. Therefore, the reader shall look at the SANA Web site for all the assignments contained in these registries.

B2.2 REGISTRY FOR ORIGINATING ORGANIZATION

The values for orginatingOrganization (see Section 6.2) are those listed in the 'Name' field of the CCSDS Organizations registry. The CCSDS Organization's registry is located at

http://sanaregistry.org/r/organizations

The policy that governs updates to the Organization registries is that defined in subsection 3.3.2.3 of reference [E11].

B2.3 REGISTRY FOR MISSIONID AND SCID

The values for the 'MissionId' parameter and the 'ScId' parameter (see Section 6.2) are those listed in the 'Spacecraft Abbreviation' field of the CCSDS Spacecraft registry. The Spacecraft registry is located at

http://sanaregistry.org/r/spacecraft

The policy that governs updates to the Organization registries is that defined in subsection 3.3.2.1 of reference [E11].

B2.4 REGISTRY FOR TRKSTNID

The values for the 'TrkStnId' parameter (see 6.2) of this Recommended Practice are formed by joining, with a dash '-', the value of the Site Name Abbreviation field and the value of the Aperture Name Abbreviation field of the Service Sites and Apertures registry. The Service Sites and Apertures registry is located at

http://sanaregistry.org/r/service_sites_apertures

Each Site Name record contains at least one Aperture Name field. It may contain as many fields as needed to list as many apertures found at one site as needed. The Aperture Name and Aperture Name Abbreviations are unique with respect to any other Aperture Name or Aperture Name Abbreviations for the particular Site Name.

It should be noted that this document specifies strings of 16 characters or less for both the parameters.

The policy that governs updates to the Organization registries is that defined in subsection 3.3.2.4 of reference [E11].

B2.5 REGISTRY FOR QUID

The values for QuId (see 6.2) are those listed in the 'Name' field of the CCSDS DDOR X-Band Radio Sources registry. The CCSDS Organization's registry is located at

http://sanaregistry.org/r/radio_sources

The policy that governs updates to the Quasar ID registries is that defined in annex B of reference [E10].

B2.6 USE OF UNREGISTERED VALUES

Only values that have been registered should be used for the originatingOrganization, ScId and TrkStnId parameters. Unregistered values for the originatingOrganization, ScId, and TrkStnId parameters may be used. If unregistered values are used they should be prefixed with the string 'UNR::'.

NOTES

1 'UNR::' indicates an unregistered value;

2 this helps eliminate potential confusion in a multi-agency cross support context;

3 use of unregistered values is not recommended and should be avoided if possible.

B3 PATENT CONSIDERATIONS

No patent rights are known to adhere to any of the specifications of the Recommended Practice.

ANNEX C

SUPPORT REQUEST EXAMPLES

(INFORMATIVE)

C1 EXAMPLE 1

<Maven-Abbrev>_DDOR_2014_228_2014_250_v2.des

```
$ddorGroundObservationsEventSequence
RequestId = 2014-205T15:50:00;
FormatVersion = 1;
orginatingOrganization = DSN;
MissionId = <Maven-Abbrev>;
$START
ddorConfigProfileId = 202F2;
ScIndex____ScId____DorOn____DorOff =
SC01   <Maven-Abbrev>   2014-228T02:25:00   2014-228T03:25:00
;
QuIndex____QuId____QuFlux =
QU01    P_1504-167    0.52
;
TrkStnId____TrackStart____TrackEnd =
<Site1>-<Apper1>     2014-228T02:25:00   2014-228T03:25:00
<Site2>-<Apper2>     2014-228T02:25:00   2014-228T03:25:00
<Site3>-<Apper3>     2014-228T02:25:00   2014-228T03:25:00
;
DdorEpoch = 2014-228T02:25:00;
ScanNum____ScanSource____ScanStart____Duration =
1       SC01              00:00:00    00:01:00
2       QU01              00:03:00    00:05:00
3       SC01              00:10:00    00:06:00
4       QU01              00:18:00    00:07:30
5       SC01              00:27:30    00:06:00
6       QU01              00:35:30    00:07:30
7       SC01              00:45:00    00:06:00
8       QU01              00:53:00    00:05:00
;
$END
$START
ddorConfigProfileId = 202F2;
ScIndex____ScId____DorOn____DorOff =
SC01   <Maven-Abbrev>   2014-250T01:25:00   2014-250T02:25:00
;
QuIndex____QuId____QuFlux =
QU01    P_1519-273    1.12
;
TrkStnId____TrackStart____TrackEnd =
<Site1>-<Apper1>     2014-250T01:25:00   2014-250T02:25:00
<Site2>-<Apper2>     2014-250T01:25:00   2014-250T02:25:00
<Site3>-<Apper3>     2014-250T01:25:00   2014-250T02:25:00
;
DdorEpoch = 2014-250T01:25:00;
ScanNum____ScanSource____ScanStart____Duration =
1       SC01              00:00:00    00:01:00
2       QU01              00:03:00    00:05:00
3       SC01              00:10:00    00:06:00
4       QU01              00:18:00    00:07:30
5       SC01              00:27:30    00:06:00
6       QU01              00:35:30    00:07:30
7       SC01              00:45:00    00:06:00
8       QU01              00:53:00    00:05:00
;
$END
$$EOF
```

<Maven-Abbrev>_202F2.dcf

```
$ddorConfigurationProfile
```

```
ddorConfigProfileId = 202F2;
ScIndex____ScId____ScFlux____Pol____Carrier =
SC01  <Maven-Abbrev>   -142.0    RCP    8425862163.0
;
ScSampleRate = 50000;
ScSampleSize = 8;
QuSampleRate = 2000000;
QuSampleSize = 2;
ChanNum___ScAssoc___SigComp___DeltaFlux___CohFlg___DorMult___Subcar____Harm =
1       SC01       DORTONE     -6.0      T         1/440    281248.0          +1
2       SC01       DORTONE    -16.0      T         1/440    281248.0          +2
3       SC01       CARRIER     -4.0      T         1/440    281248.0           0
4       SC01       DORTONE     -6.0      T         1/440    281248.0          -1
;
$END
```

C2 EXAMPLE 2

<PLC-Abbrev>_DDOR_2015_304_2015_304_v1.des

```
$ddorGroundObservationsEventSequence
RequestId = 2015-300T16:20:00;
FormatVersion = 1;
orginatingOrganization = DSN;
MissionId = <PLC-Abbrev>;
$START
ddorConfigProfileId = 005;
ScIndex____ScId____DorOn____DorOff =
SC01   <PLC-Abbrev>    2015-304T12:45:00   2015-304T13:45:00
;
QuIndex___QuId___QuFlux =
QU01    P_1055+01    2.00
QU02    P_1219+04    1.00
;
TrkStnId___TrackStart____TrackEnd =
<Site1>-<Apper1>     2015-304T12:45:00   2015-304T13:45:00
<Site2>-<Apper2>     2015-304T12:45:00   2015-304T13:45:00
;
DdorEpoch = 2015-304T12:45:00;
ScanNum___ScanSource____ScanStart____Duration =
1       SC01              00:00:00    00:01:30
2       QU01              00:02:00    00:05:30
3       SC01              00:08:00    00:09:30
4       QU02              00:18:00    00:07:30
5       SC01              00:26:00    00:09:30
6       QU01              00:36:00    00:07:30
7       SC01              00:44:00    00:09:30
8       QU02              00:54:00    00:05:30
;
$END
$$EOF
```

<PLC-Abbrev>_005.dcf

```
$ddorConfigurationProfile
ddorConfigProfileId = 005;
ScIndex___ScId___ScFlux____Pol___Carrier =
SC01  <PLC-Abbrev>   -142.0    RCP    8425862163.0
;
ScSampleRate = 50000;
ScSampleSize = 8;
QuSampleRate = 4000000;
QuSampleSize = 2;
ChanNum____ScAssoc____SigComp____DeltaFlux____CohFlg____DorMult___Subcar____Harm =
1           SC01      CARRIER      0.0          F        1/1     262141.0      0
2           SC01      SUBCAR     -11.0          F        1/1     262141.0     -2
3           SC01      SUBCAR     -11.0          F        1/1     262141.0     +2
;
$END
```

C3 EXAMPLE 3

<Procyon-Abbrev>_DDOR_2015_305_2015_305_v5.des

```
$ddorGroundObservationsEventSequence
RequestId = 2015-302T14:45:00;
FormatVersion = 1;
orginatingOrganization = DSN;
MissionId = <Procyon-Abbrev>;
$START
ddorConfigProfileId = HYB2-PRCN;
ScIndex____ScId____DorOn____DorOff =
SC01   <Hayabusa2-Abbrev>    2015-305T02:50:00   2015-305T05:00:00
SC02   <Procyon-Abbrev>      2015-305T02:50:00   2015-305T05:00:00
;
QuIndex____QuId____QuFlux =
QU01    DA_406      2.10
QU02    OS_092      1.10
;
TrkStnId___TrackStart___TrackEnd =
<Site1>-<Apper1>     2015-305T03:00:00   2015-305T05:00:00
<Site2>-<Apper2>     2015-305T03:00:00   2015-305T05:00:00
;
DdorEpoch = 2015-305T03:00:00;
ScanNum____ScanSource____ScanStart___Duration =
1       SC02        00:00:00    00:59:00
2       SC02        01:00:00    00:02:30
3       QU01        01:03:50    00:04:30
4       SC02        01:09:40    00:04:30
5       SC01        01:15:10    00:04:30
6       QU02        01:21:00    00:04:30
7       SC02        01:26:50    00:04:30
8       SC01        01:32:20    00:04:30
9       QU01        01:38:10    00:04:30
10      SC02        01:44:00    00:04:30
11      SC01        01:49:30    00:04:30
12      QU02        01:55:20    00:04:30
;
$END
$$EOF
```

<Procyon-Abbrev>_HYB2-PRCN.dcf

```
$ddorConfigurationProfile
ddorConfigProfileId = HYB2-PRCN;
ScIndex___ScId___ScFlux___Pol___Carrier =
SC01   <Hayabusa2-Abbrev>    -142.0    RCP    8425862163.0
SC02   <Procyon-Abbrev>      -147.0    RCP    8445007928.0
;
ScSampleRate = 50000;
ScSampleSize = 8;
QuSampleRate = 8000000;
QuSampleSize = 2;
ChanNum___ScAssoc___SigComp___DeltaFlux___CohFlg___DorMult___Subcar___Harm =
1       SC01       CARRIER      0.0      T   0.000568095133743686     0         0
2       SC01       DORTONE    -10.0      T   0.000568095133743686     0        -4
3       SC01       DORTONE    -10.0      T   0.000568095133743686     0        +4
4       SC01       DORTONE    -15.0      T   0.000568095133743686     0        +1
5       SC02       CARRIER      0.0            F       1/1     4797454.0       0
6       SC02       SUBCAR       0.0            F       1/1    47969999.0      +1
7       SC02       SUBCAR       0.0            F       1/1    38024695.0      -1
8       SC02       SUBCAR     -15.0            F       1/1     4797454.0      +1
9       SC02       SUBCAR     -10.0            F       1/1     4797454.0      -4
10      SC02       SUBCAR     -28.0            F       1/1     4797454.0      +8
;
$END
```

C4 EXAMPLE 4

<Hayabusa2-Abbrev>_DDOR_2014_363_2014_363_v7.des

```
$ddorGroundObservationsEventSequence
RequestId = 2014-353T00:30:00;
FormatVersion = 1;
orginatingOrganization = DSN;
MissionId = <Hayabusa2-Abbrev>;
$START
ddorConfigProfileId = 037SUB;
ScIndex____ScId____DorOn____DorOff =
SC01   <Hayabusa2-Abbrev>     2014-363T13:25:00   2014-363T15:25:00
;
QuIndex____QuId____QuFlux =
QU01    0454-234     1.60
;
TrkStnId____TrackStart____TrackEnd =
<Site1>-<Apper1>     2014-363T13:25:00   2014-363T15:25:00
<Site2>-<Apper2>     2014-363T13:25:00   2014-363T15:25:00
<Site3>-<Apper3>     2014-363T14:36:40   2014-363T15:06:00
;
DdorEpoch = 2014-363T13:25:00;
ScanNum____ScanSource____ScanStart____Duration =
1       QU01              00:00:20    00:05:50
2       SC01              00:06:50    00:05:00
3       QU01              00:12:30    00:06:10
4       SC01              00:19:20    00:05:00
5       QU01              00:25:00    00:06:10
6       SC01              00:31:50    00:05:00
7       QU01              00:37:30    00:06:10
8       SC01              00:44:20    00:04:20
9       SC01              00:49:00    00:03:40
10      SC01              00:53:00    00:04:20
11      SC01              00:57:40    00:03:40
12      SC01              01:01:40    00:04:20
13      SC01              01:06:20    00:03:40
14      SC01              01:10:20    00:04:20
15      QU01              01:15:20    00:06:00
16      SC01              01:22:00    00:05:20
17      QU01              01:28:00    00:06:20
18      SC01              01:35:00    00:05:20
19      QU01              01:41:00    00:06:20
20      SC01              01:48:00    00:05:20
21      QU01              01:54:00    00:05:20
;
$END
$$EOF
```

<HAYABUSA2-Abbrev>_037SUB.dcf

```
$ddorConfigurationProfile
ddorConfigProfileId = 037SUB;
ScIndex____ScId____ScFlux____Pol____Carrier =
SC01   <Hayabusa2-Abbrev>    -142.0    RCP    8425862163.0
;
ScSampleRate = 50000;
ScSampleSize = 8;
QuSampleRate = 8000000;
QuSampleSize = 2;
ChanNum____ScAssoc____SigComp____DeltaFlux____CohFlg____DorMult____Subcar____Harm =
1       SC01       CARRIER      0.0             F       1/1     4786692.0       0
2       SC01       SUBCAR     -10.0             F       1/1     4786692.0      -4
3       SC01       SUBCAR     -15.0             F       1/1     4786692.0      +1
4       SC01       SUBCAR     -10.0             F       1/1     4786692.0      +4
5       SC01       SUBCAR     -28.0             F       1/1     4786692.0      -8
6       SC01       SUBCAR     -28.0             F       1/1     4786692.0      +8
;
$END
```

ANNEX D

ABBREVIATIONS AND ACRONYMS

(INFORMATIVE)

Abbreviations used in this document are defined with the first textual use of the term. All abbreviations used in this document are listed below.

CCSDS	Consultative Committee for Space Data Systems
CSS	Cross Support Services
DCA	Data Collection Agency
DPA	Data Processing Agency
DUA	Data Usage Agency
Delta-DOR	delta Differential One-way Range
DOR	Differential One-way Range
DSN	Deep Space Network
ESA	European Space Agency
G/T	Antenna gain to system noise temperature ratio
Hz	Hertz
IA	Implementing Arrangement
ID	Identifier
IF	Interface
JAXA	Japan Aerospace Exploration Agency
JPL	Jet Propulsion Laboratory
MOIMS	Mission Operations and Information Management Services
NASA	National Aeronautics and Space Administration
OEM	Orbit Ephemeris Message
PLL	Phase Locked Loop
RF	Radio Frequency

Rx	Receiver
S/C	Spacecraft
SLE	Space Link Extensions
SLS	Space Link Services
TDM	Tracking Data Message (CCSDS)
UTC	Universal Time Coordinated
UVA	Under Validation Agency
VA	Validating Agency
VLBI	Very Long Baseline Interferometry

ANNEX E

INFORMATIVE REFERENCES

(INFORMATIVE)

NOTE – Normative references are provided in 1.5.

[E1] *Delta-DOR—Technical Characteristics and Performance*. Issue 1. Report Concerning Space Data System Standards (Green Book), CCSDS 500.1-G-1. Washington, D.C.: CCSDS, May 2013.

[E2] *Navigation Data—Definitions and Conventions*. Issue 3. Report Concerning Space Data System Standards (Green Book), CCSDS 500.0-G-3. Washington, D.C.: CCSDS, May 2010.

[E3] *The Application of CCSDS Protocols to Secure Systems*. Issue 2. Report Concerning Space Data System Standards (Green Book), CCSDS 350.0-G-2. Washington, D.C.: CCSDS, January 2006.

[E4] Catherine L. Thornton and James S. Border. *Radiometric Tracking Techniques for Deep-Space Navigation*. JPL Deep-Space Communications and Navigation Series. Joseph H. Yuen, Series Editor. Hoboken, N.J.: Wiley, 2003.

[E5] *XML Specification for Navigation Data Messages*. Issue 1. Recommendation for Space Data System Standards (Blue Book), CCSDS 505.0-B-1. Washington, D.C.: CCSDS, December 2010.

[E6] Theodore D. Moyer. *Formulation for Observed and Computed Values of Deep Space Network Data Types for Navigation*. JPL Deep-Space Communications and Navigation Series. Joseph H. Yuen, Series Editor. Hoboken, N.J.: Wiley, 2003.

[E7] *Delta Differential One-way Ranging*. Module 210, Rev. A, February 9, 2015 in *DSN Telecommunications Link Design Handbook*. DSN No. 810-005, Rev. E. Pasadena California: JPL, November 30, 2000.

[E8] Timothy McElrath, et al. "Mars Exploration Rovers Orbit Determination Filter Strategy." In *AIAA/AAS Astrodynamics Specialist Conference and Exhibit, August 16-19, 2004 (Providence, Rhode Island)*. Pasadena, CA: JPL, 2004.

[E9] *Space Communication Cross Support—Service Management—Service Specification*. Issue 1. Recommendation for Space Data System Standards (Blue Book), CCSDS 910.11-B-1. Washington, D.C.: CCSDS, August 2009.

[E10] *Delta-DOR Quasar Catalog Update Procedure*. Issue 1. Recommendation for Space Data System Practices (Magenta Book), CCSDS 506.3-M-1. Washington, D.C.: CCSDS, February 2018.

[E11] *CCSDS SANA Registry Management Policy*. Issue 1. CCSDS Record (Yellow Book), CCSDS 313.1-Y-1. Washington, D.C.: CCSDS, May 2016.