APPENDIX A

User Study Handout

This study investigates how visibility constraints in feature models affect users when configuring product lines. Your performance and experience will help us assess whether visibility constraints can enhance comprehension, reduce cognitive load, and improve efficiency during configuration.

A.1 Study Setup

You will conduct two configuration tasks using the *FeatureIDE once without* and *once with visibility constraints* in the feature models, which allow for revealing additional features during the configuration. This simulates the work of an engineer responsible for deriving production variants that satisfy technical and manufacturing constraints, such as sequencing tasks where process engineers must ensure a correct assembly order.

A.1.1 Technical Requirements and Access

As a study participant, you will need a computer with *Zoom*[1] or *Microsoft Teams*[2] installed. We will provide you with a link to the meeting.

At the beginning of the session:

1. The study conductor to share the screen.
2. The study conductor will ask you to request *Remote Control Access*.
3. You will be able to remotely conduct the tasks in the *FeatureIDE*.

During the study, we will record your screen interactions and task completion times for later analysis and review. After completing both tasks, we will administer a brief questionnaire[3],

[1] Zoom: `https://www.zoom.com/`
[2] Microsoft Teams: `https://www.microsoft.com/en-us/microsoft-teams/`
[3] Study Questionnaire: `https://forms.gle/UmbWwWNjSkpZgK8eA`

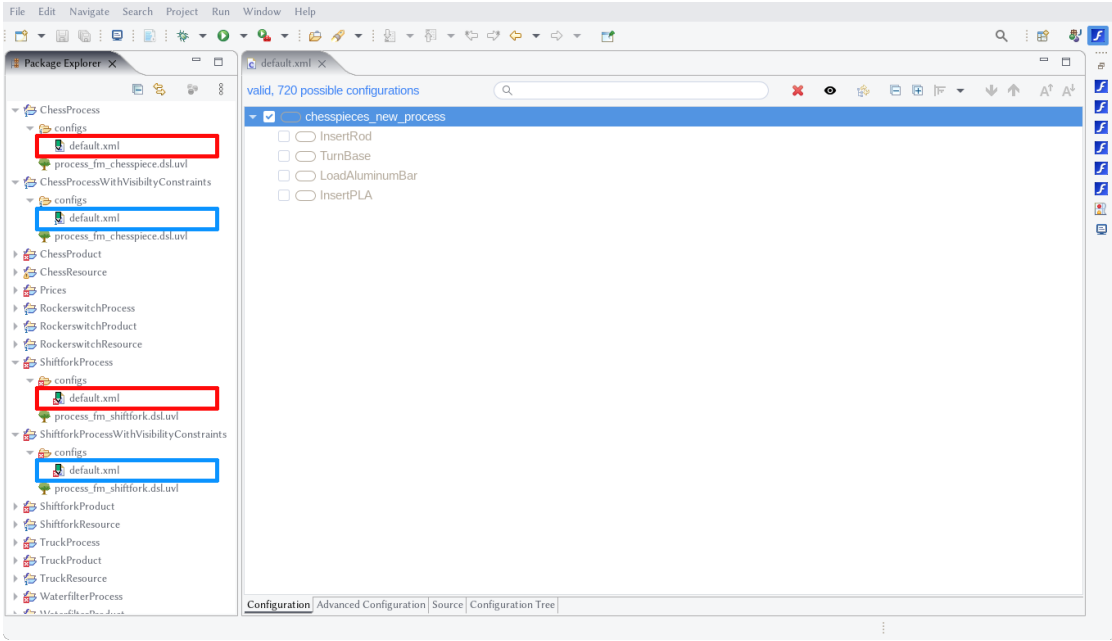

Figure A.1: Configuration files needed for the user-study tasks shown inside FeatureIDE

which you can open on your computer, to assess the perceived difficulty and usability of the tasks. You can always ask clarifying questions about the task description. If connection issues arise, we will pause the study and re-establish the connection before continuing.

A.2 Tasks

The tasks cover configuring the *Shift Fork* and *Chess Piece* manufacturing product lines. Each product line consists of multiple interdependent components and process steps represented in a feature model. You can imagine that you are production system engineer configuring a manufacturing process for each of these product lines.

For each task, you will:

1. Open the configuration file default.xml of the projects without visibility constrains (*ShiftforkProcess* and *ChessProcess*, cf. Figure A.1 red frames).
2. Complete the task as described in Table A.1 based on the underlying feature model.
3. Validate your configuration using *FeatureIDE's* built-in validation function.
4. Repeat the same task under the alternate project with visibility constraints (*ShiftforkProcessWithVisibilityConstraints* and *ChessProcessWithVisibilityConstraints*, cf. Figure A.1 blue frames).

The production process step order should semantically adhere to the production process described in the accompanying use cases below.

ID	Task Description	FM used for Task
T1	Find a valid configuration order of process steps to manufacture a *Rook*, ensuring all relevant parts are **screwed** together. The task is *finished* when only a ***single valid*** configuration remains in the *FeatureIDE* configurator.	Chess Piece - Process
T2	Find a valid configuration order of process steps for manufacturing a complete *Shift Fork* that includes *Jack1* and *Barrel1_2*, ensuring both parts are **welded** onto the *Pipe*. The task is *finished* when only a ***single valid*** configuration remains in the *FeatureIDE* configurator.	Shift Fork - Process

Table A.1: User Study Tasks

The following description provides a brief explanation of the *Chess Piece* and *Shift Fork* use cases, which should help you to perform the two configuration tasks.

A.2.1 Chess Piece Use Case

This section first describes the chess piece product line, which consists of the standard chess pieces *King*, *Queen*, *Rook*, *Bishop*, *Knight*, and *Pawn*, and then how these pieces are produced.

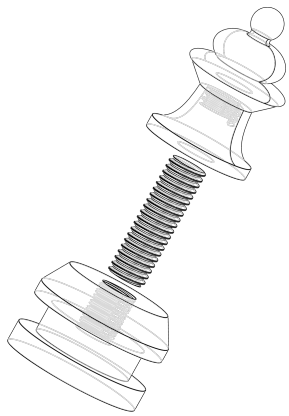

Figure A.2: CAD drawing of the *Pawn* of the chess piece product line [Meixner et al., 2024].

Each chess piece consists of three major parts: a *Base*, a 3D-printed *Body*, and a threaded *Rod* that connects them. As an example, Figure A.2 shows a CAD drawing of the *Pawn* chess piece. The parts of the chess pieces are listed in Table A.2, with the limitation that for simplicity the *Body* part is listed once but printed in its individual form for each chess piece.

The *Base* is produced from *Aluminum bars* on a *turning machine*. The *Aluminum bar* is *loaded into* the *turning machine* with a *bar loader*.

Table A.2: Variability matrix of the *chess piece* types.

Parts/Types	Base 1R	Base 2R	Body	King	Queen	Rook	Bishop	Knight	Pawn
Aluminum bar	×	×							
Base 1R						×	×	×	×
Base 2R				×	×				
PLA			×						
M6 Rod short						×	×	×	×
M6 Rod long				×	×				
Body (individual)				×	×	×	×	×	×

The *Bases* come in two variants and are *turned* on the *turning machine* to a cone shape. Furthermore, the *Bases* have either *two circumferential reamings* – *Base 2R* for the *King* and *Queen* – or *one circumferential reaming* – *Base 1R* for all other chess pieces – that are *carved* into the *aluminum*. The *turning machine* then *cuts* the *Aluminum bar* into the *Bases* of suitable length for further processing.

The *Body* of the particular chess pieces is *3D-printed* from *polylactic acid (PLA)* on an industrial *3D printer*.

The *Base* and the *Body* each have a hole with a thread carved/printed in the middle. The threads each have a diameter for a standardized M6 *Rod*. While the King and Queen have long M6 *Rods*, the other chess pieces have short M6 *Rods*.

The *Base*, the *Body*, and the threaded *Rod* are assembled in an *assembly station*, where each part needs to be loaded into the station. The parts need to be *screwed* together, which can be done in an arbitrary sequence.

A.2.2 Shift Fork Use Case

This section describes the shift fork product line and the processes by which the shift forks are produced.

A shift fork is a component of a manual transmission in a vehicle, such as a car. It shifts a cuff along a rod into a particular position so that the gears connect correctly. Figure A.3 shows a 3D rendering of two types of shift forks, out of the four that make up the product line, and some of their parts.

The different shift fork types – *Fork-13*, *Fork-2R*, *Fork-46*, and *Fork-57* – consist of either ten or eleven parts, which are listed in Table A.3 with their dependencies. The shift forks consists of *Pipes* – *Pipe 2*, *Pipe 3*, or *Pipe 8* – *Locks* – *Lock 1*, *Lock 2*, or *Lock 3*, one or two *Barrels* – *Barrel 1_1* and *Barrel 1_2*, two forks on the sides – *Fork 3* and *Fork 4* – and *Fork 5* in the middle, a *Jack 1*, a *Ring 1*, a *Screw*, and an *O-Ring*. When long pipes are used – *Pipe 2* and *Pipe 8* – *Barrel 1_2* also needs to be installed onto the pipe.

The shift forks are produced in a line production system, where a fixed belt conveyor transports the workpieces, and the robots standing beside the conveyor manipulate them. Depending on the shift fork type, a particular *pipe* type is *loaded into* a *work cell*. The other parts can then be

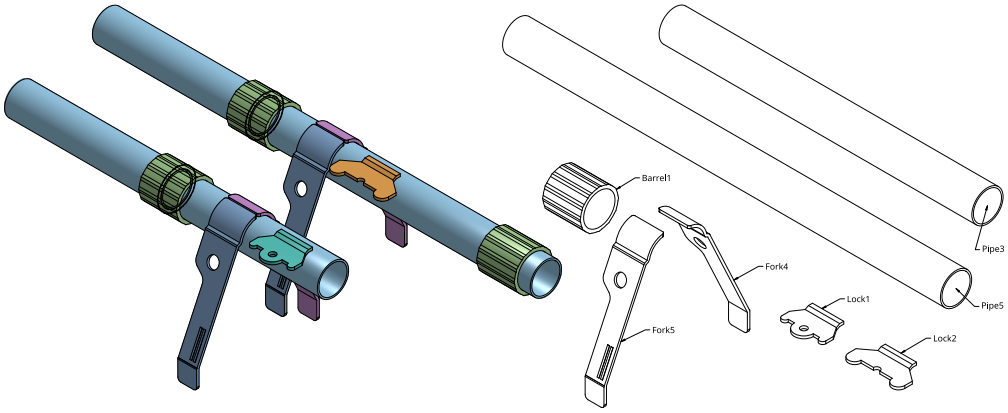

Figure A.3: 3D-rendering of two shift forks for a manual transmission and their parts [Meixner, 2024].

Table A.3: Variability matrix of the *shift fork* types.

Parts/Types	Fork-13	Fork-2R	Fork-46	Fork-57
Pipe 2				×
Pipe 3		×	×	
Pipe 8	×			
Lock 1			×	×
Lock 2		×		
Lock 3	×			
Barrel 1_1	×	×	×	×
Barrel 1_2	×			×
Fork 3	×	×	×	×
Fork 4	×	×	×	×
Fork 5	×	×	×	×
Jack 1	×	×	×	×
Ring 1	×	×	×	×
Screw	×	×	×	×
O-Ring	×	×	×	×

flexibly loaded into the production system by the work cell robots and pressed or welded onto the pipe with the respective robots.

However, *Fork 5* needs to be welded onto the pipe before *Fork 3* and *Fork 4* are welded onto the pipe. Additionally, the locks can only be welded onto the pipe after the forks. Furthermore, the *Screw* and the *O-Ring* can only be installed after *Ring 1* and *Jack 1* are installed onto the pipe.