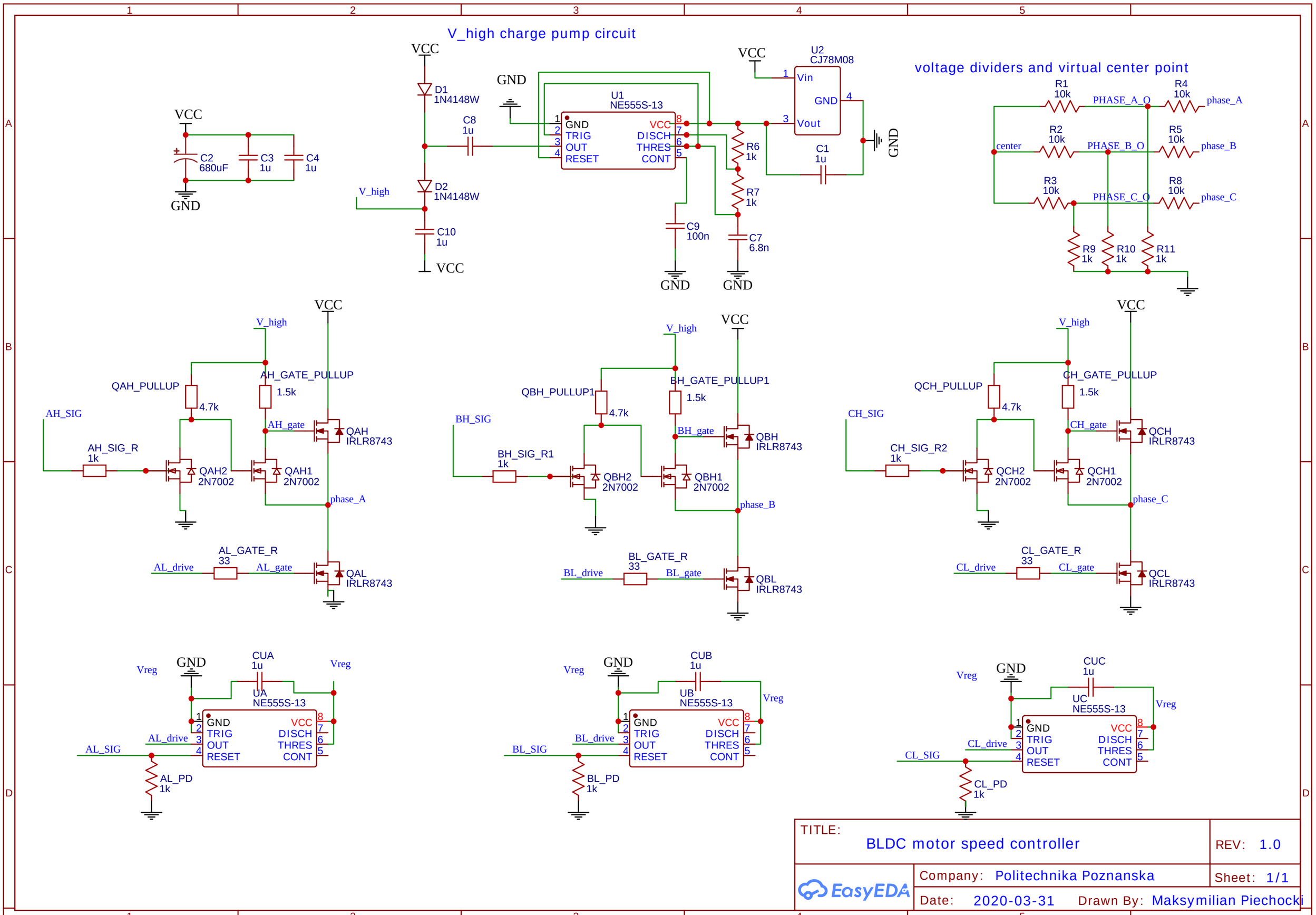
V_high charge pump circuit
VCC
GND
C2
680uF
C3
1u
C4
1u
D1
1N4148W
D2
1N4148W
C8
1u
C10
1u
V_high
U1
NE555S-13
GND
TRIG
OUT
RESET
VCC
DISCH
THRES
CONT
R6
1k
R7
1k
C9
100n
C7
6.8n
U2
CJ78M08
Vin
GND
Vout
C1
1u
voltage dividers and virtual center point
R1
10k
R2
10k
R3
10k
R4
10k
R5
10k
R8
10k
R9
1k
R10
1k
R11
1k
PHASE_A_O
PHASE_B_O
PHASE_C_O
center
phase_A
phase_B
phase_C
QAH_PULLUP
4.7k
AH_GATE_PULLUP
1.5k
AH_SIG
AH_SIG_R
1k
AH_gate
QAH
IRLR8743
QAH2
2N7002
QAH1
2N7002
phase_A
AL_GATE_R
33
AL_drive
AL_gate
QAL
IRLR8743
QBH_PULLUP1
4.7k
BH_GATE_PULLUP1
1.5k
BH_SIG
BH_SIG_R1
1k
BH_gate
QBH
IRLR8743
QBH2
2N7002
QBH1
2N7002
phase_B
BL_GATE_R
33
BL_drive
BL_gate
QBL
IRLR8743
QCH_PULLUP
4.7k
CH_GATE_PULLUP
1.5k
CH_SIG
CH_SIG_R2
1k
CH_gate
QCH
IRLR8743
QCH2
2N7002
QCH1
2N7002
phase_C
CL_GATE_R
33
CL_drive
CL_gate
QCL
IRLR8743
Vreg
CUA
1u
UA
NE555S-13
AL_SIG
AL_drive
AL_PD
1k
CUB
1u
UB
NE555S-13
BL_SIG
BL_drive
BL_PD
1k
CUC
1u
UC
NE555S-13
CL_SIG
CL_drive
CL_PD
1k
TITLE:
BLDC motor speed controller
REV: 1.0
Company: Politechnika Poznanska
Sheet: 1/1
Date: 2020-03-31
Drawn By: Maksymilian Piechocki
EasyEDA