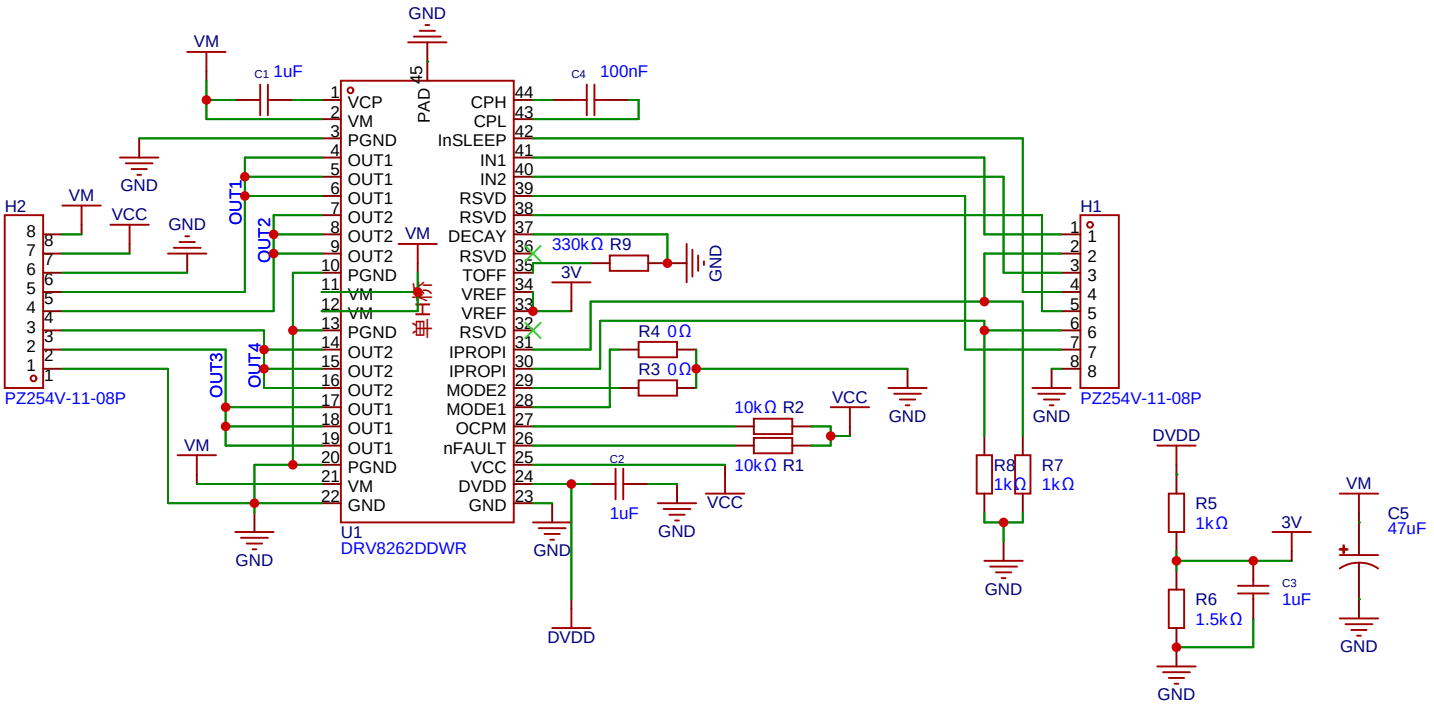

Schematic	DRV8262_breakout	Update Date	2024-04-23
		Create Date	2024-03-21
Page	P1.DRV8262_breakout	Part Number	DRV8262
Drawn	Louis Bertelsmann	DRV8262_breakout	
Reviewed	Louis Bertelsmann		
		VER	SIZE	PAGE 1 OF 1
		V1.0	A5	Tux-Robotik