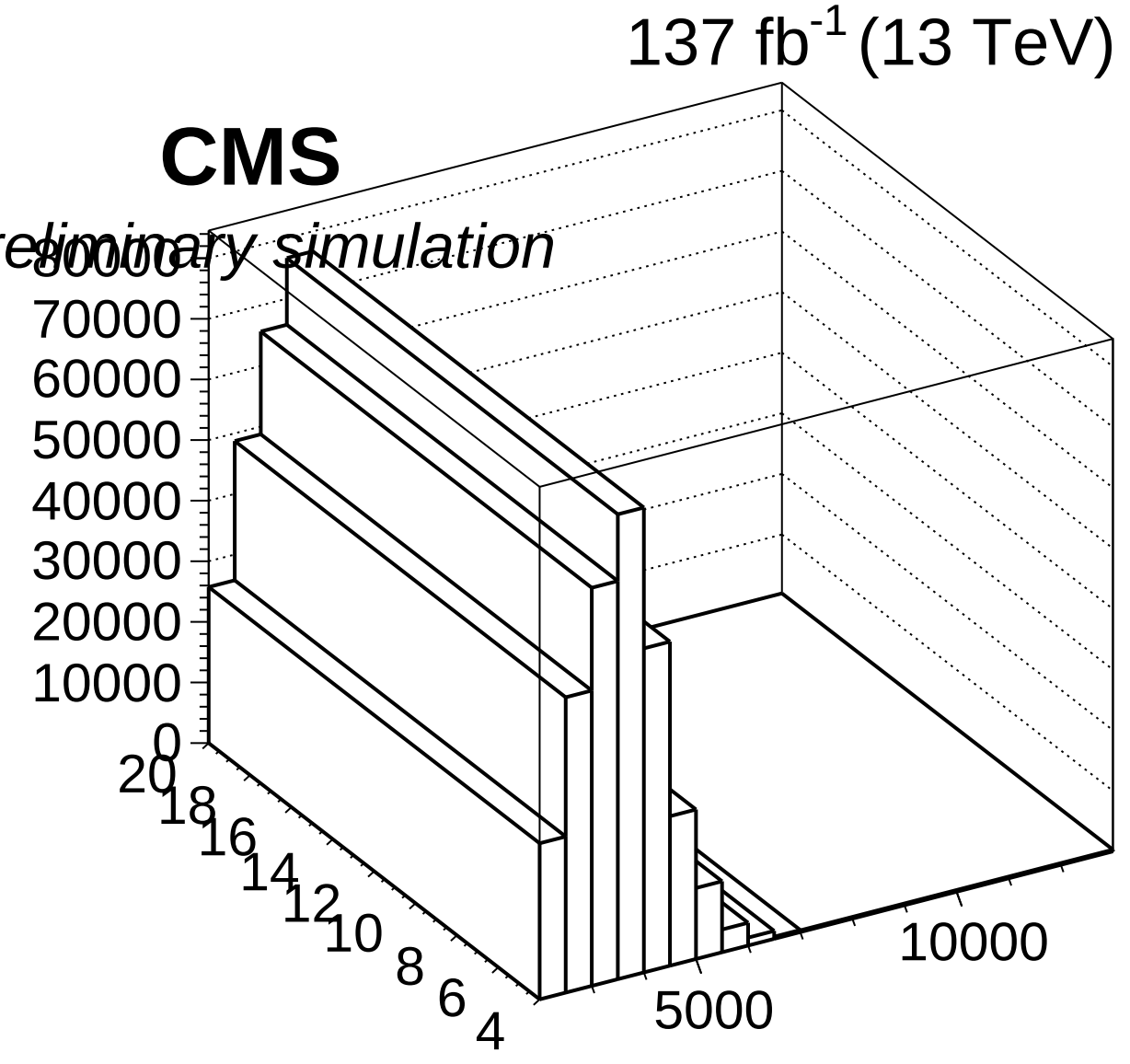
137 fb-1 (13 TeV)
CMS
Preliminary simulation
80000
70000
60000
50000
40000
30000
20000
10000
0
20
18
16
14
12
10
8
6
4
5000
10000