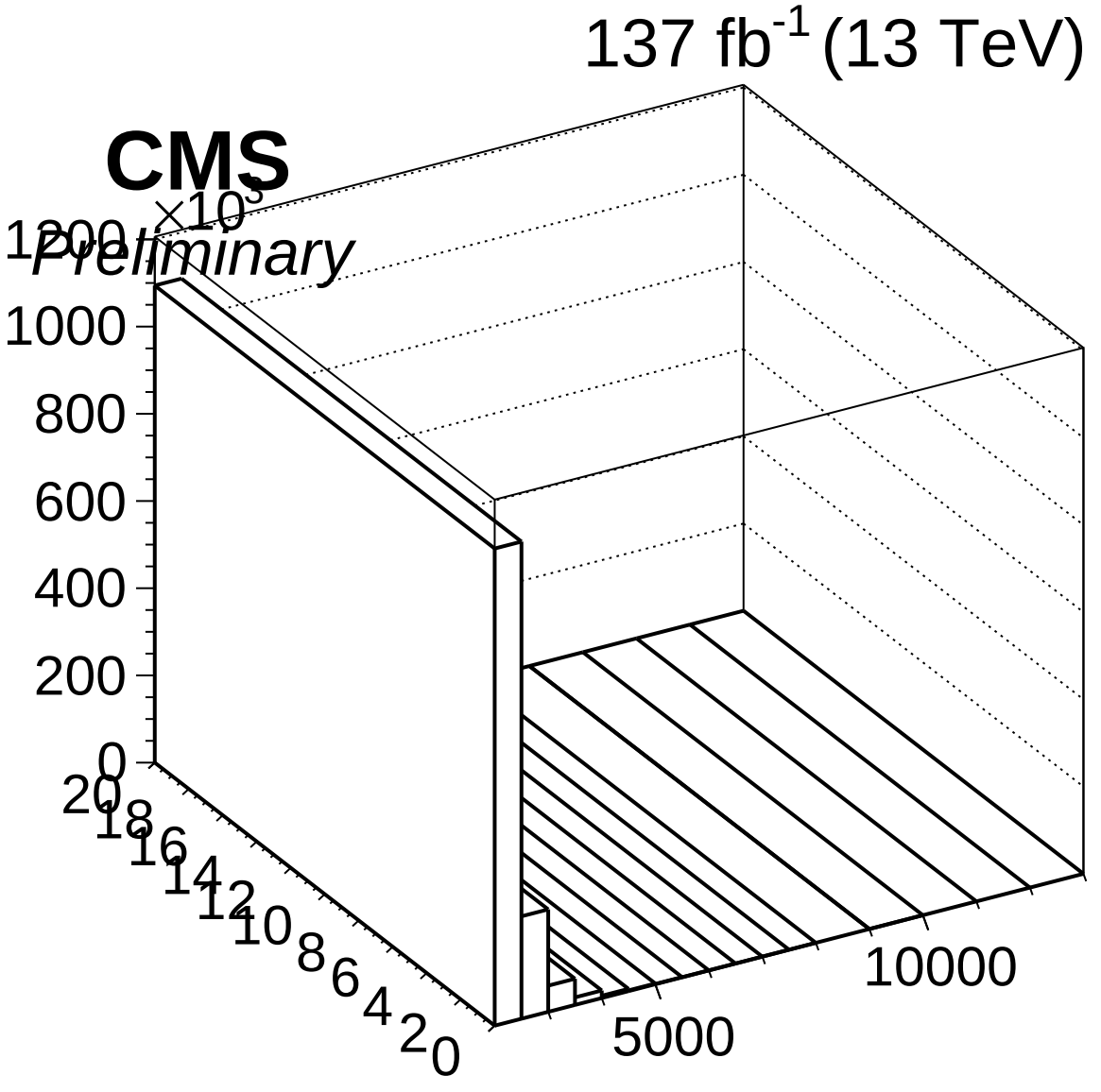
137 fb-1 (13 TeV)
CMS
Preliminary
×10³
1200
1000
800
600
400
200
0
20
18
16
14
12
10
8
6
4
2
0
5000
10000