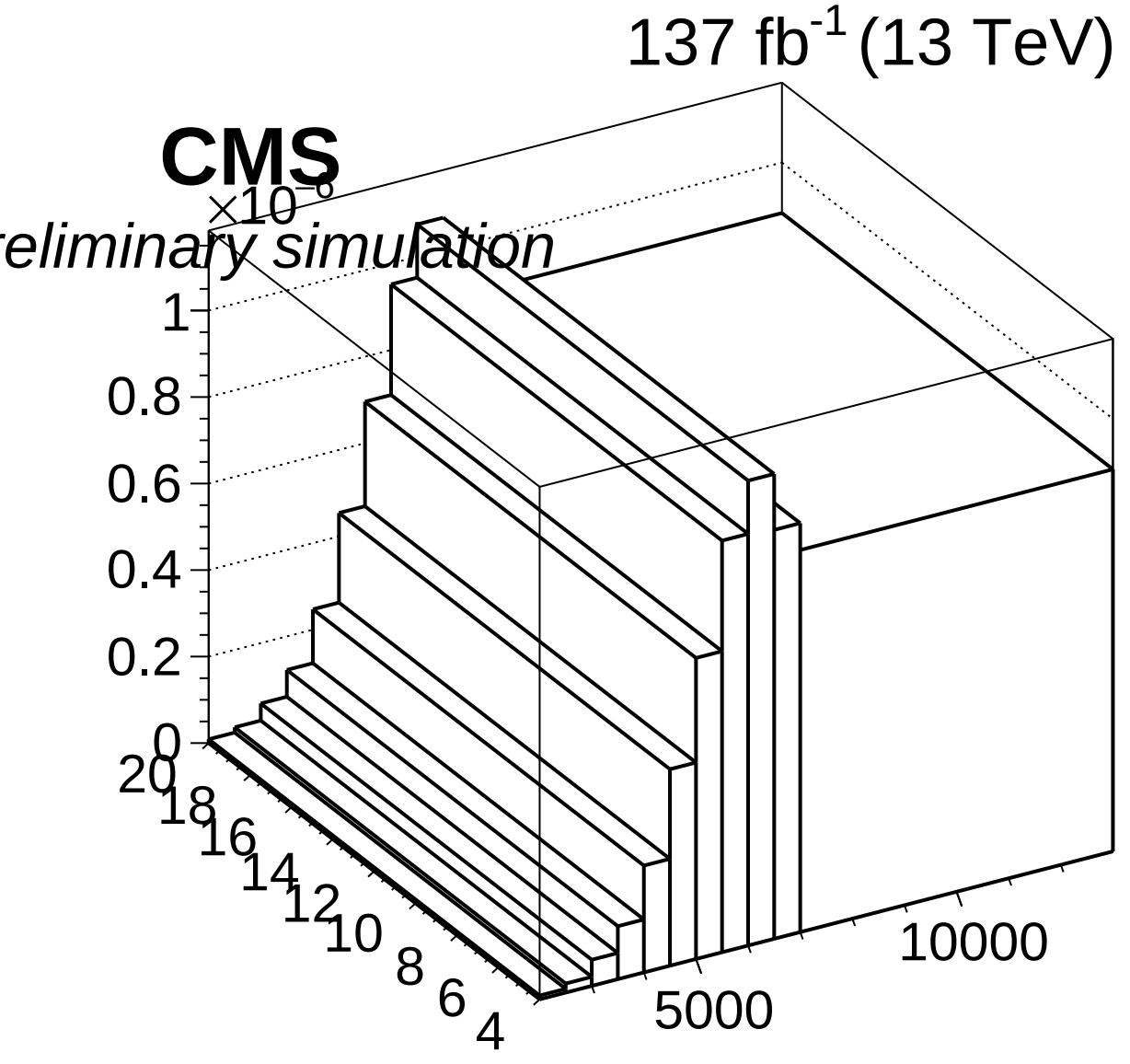
137 fb-1 (13 TeV)
CMS
Preliminary simulation
×10−6
1
0.8
0.6
0.4
0.2
0
20
18
16
14
12
10
8
6
4
5000
10000