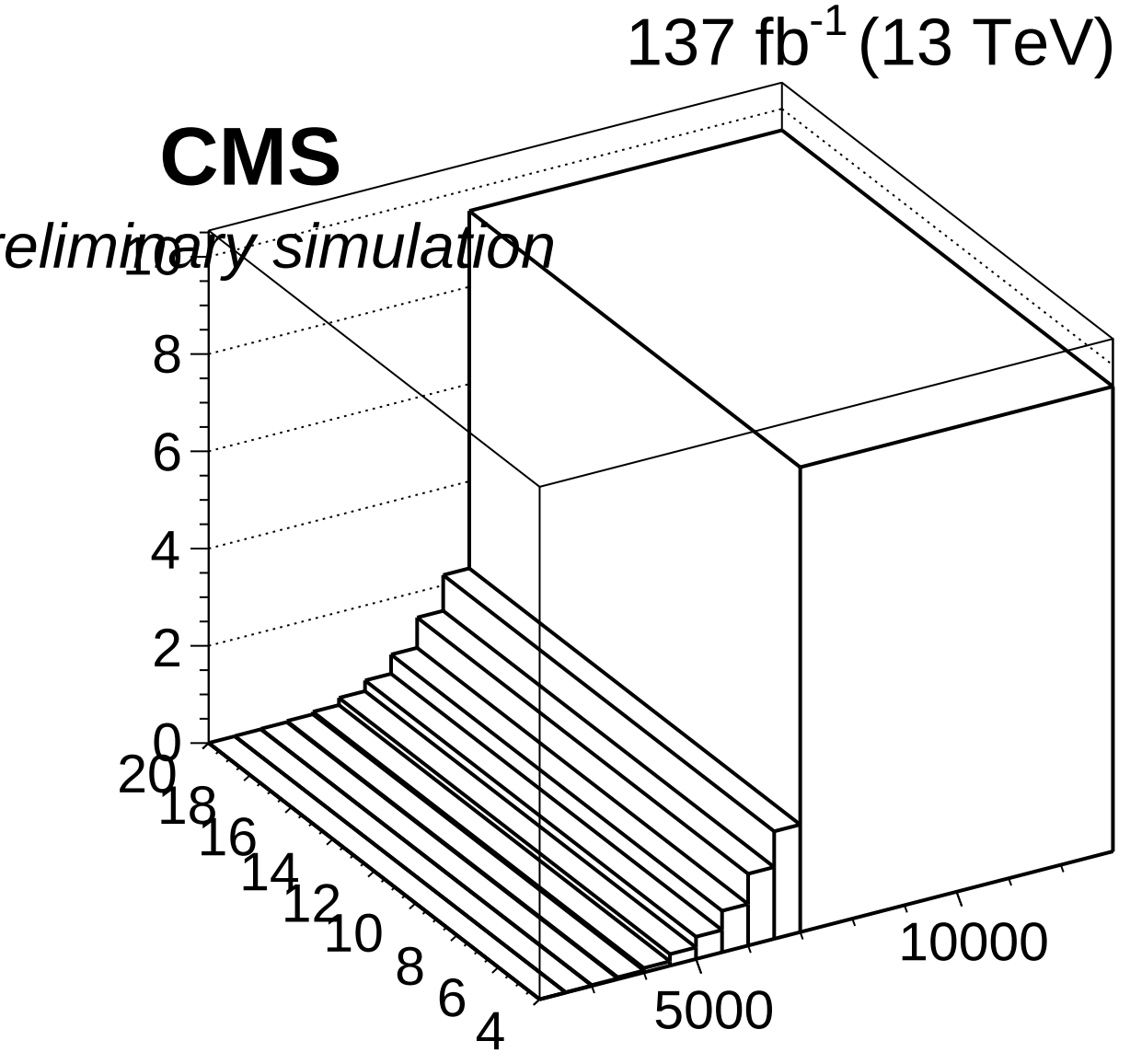
137 fb-1 (13 TeV)
CMS
Preliminary simulation
0
2
4
6
8
10
20
18
16
14
12
10
8
6
4
5000
10000