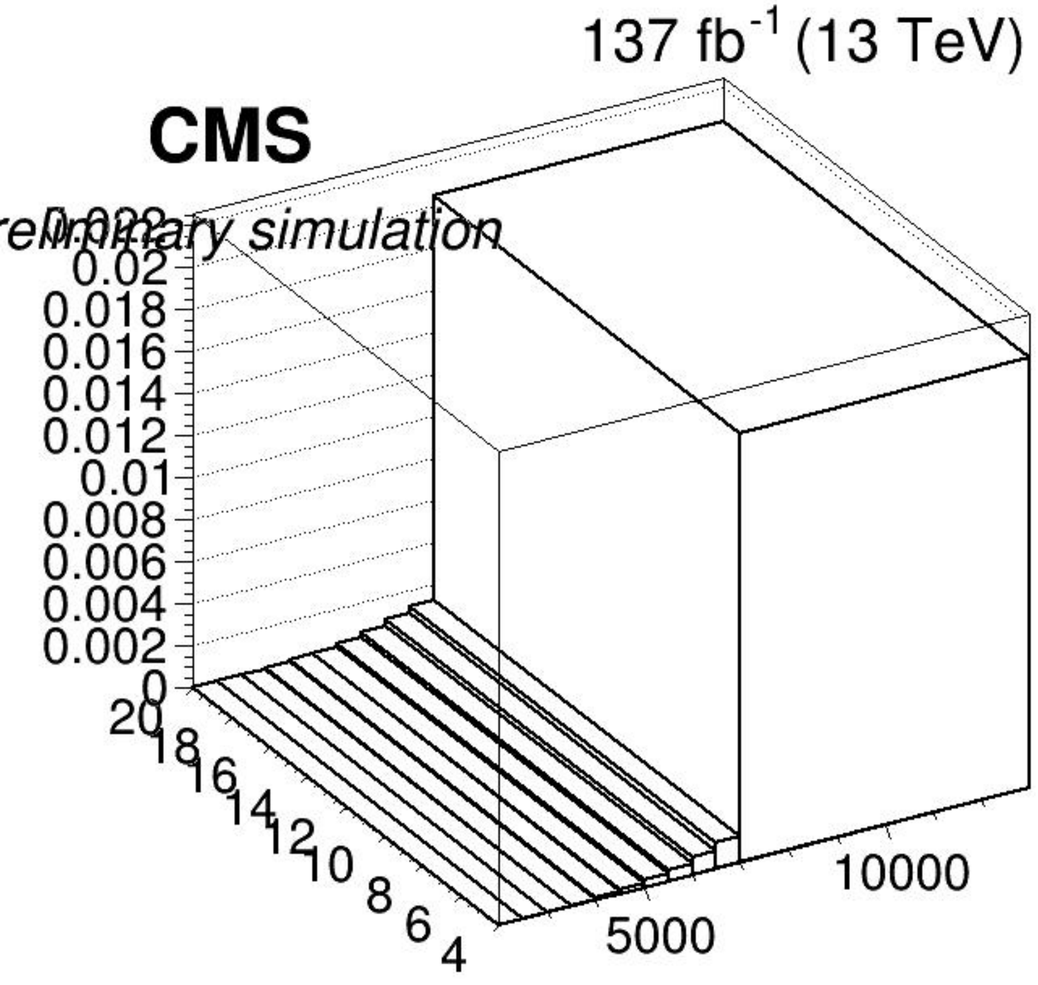
137 fb^{-1} (13 TeV)
CMS
Preliminary simulation
0.022
0.02
0.018
0.016
0.014
0.012
0.01
0.008
0.006
0.004
0.002
0
20
18
16
14
12
10
8
6
4
5000
10000

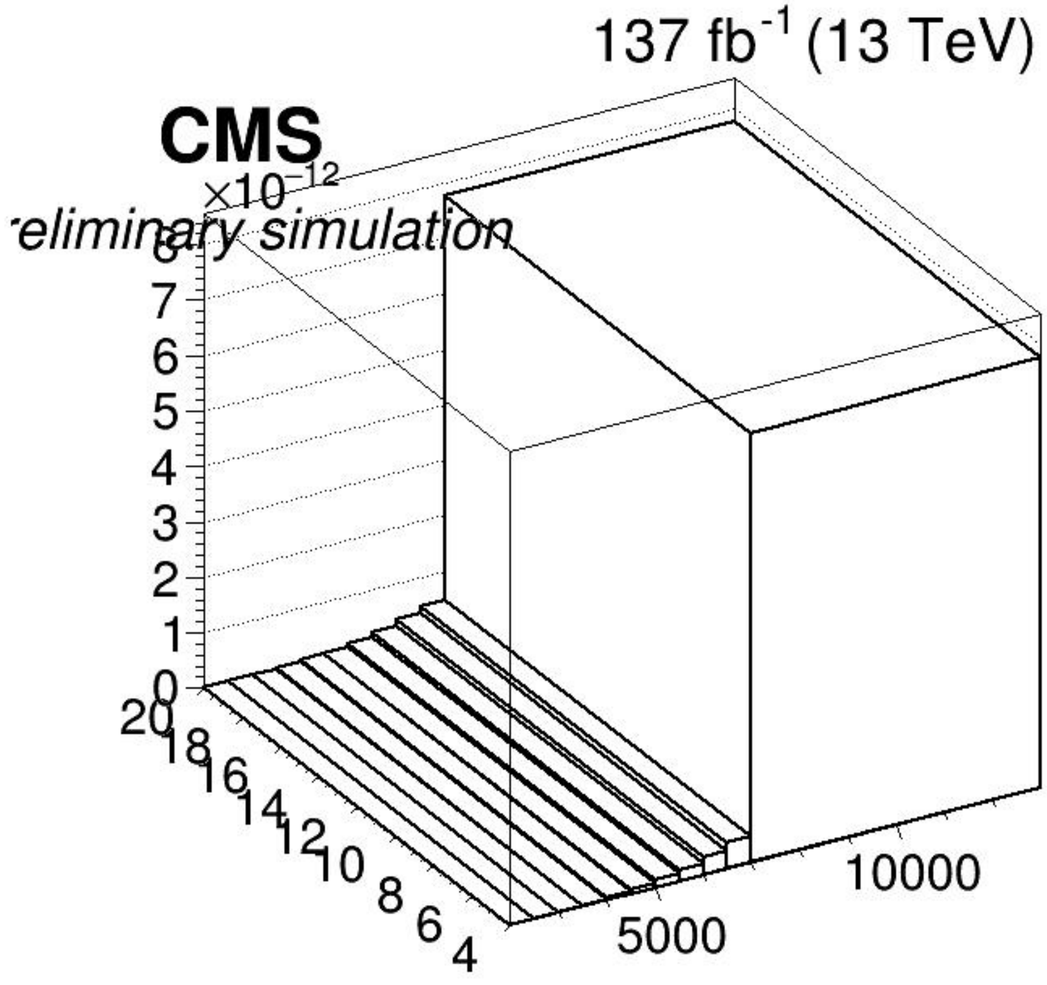
137 fb^{-1} (13 TeV)
CMS
Preliminary simulation
$\times 10^{-12}$
8
7
6
5
4
3
2
1
0
20
18
16
14
12
10
8
6
4
5000
10000