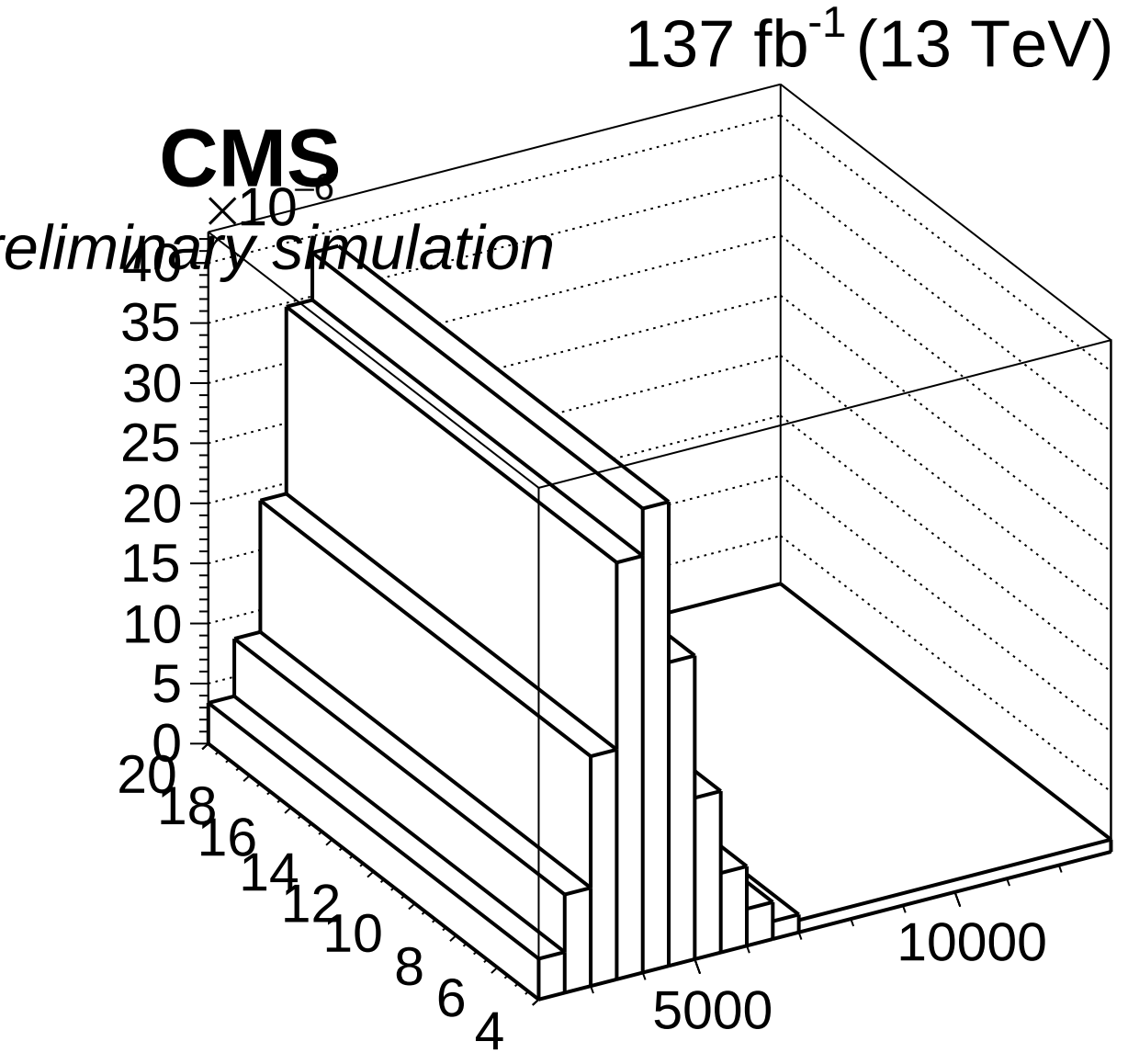
137 fb-1 (13 TeV)
CMS
Preliminary simulation
×10−6
40
35
30
25
20
15
10
5
0
20
18
16
14
12
10
8
6
4
5000
10000