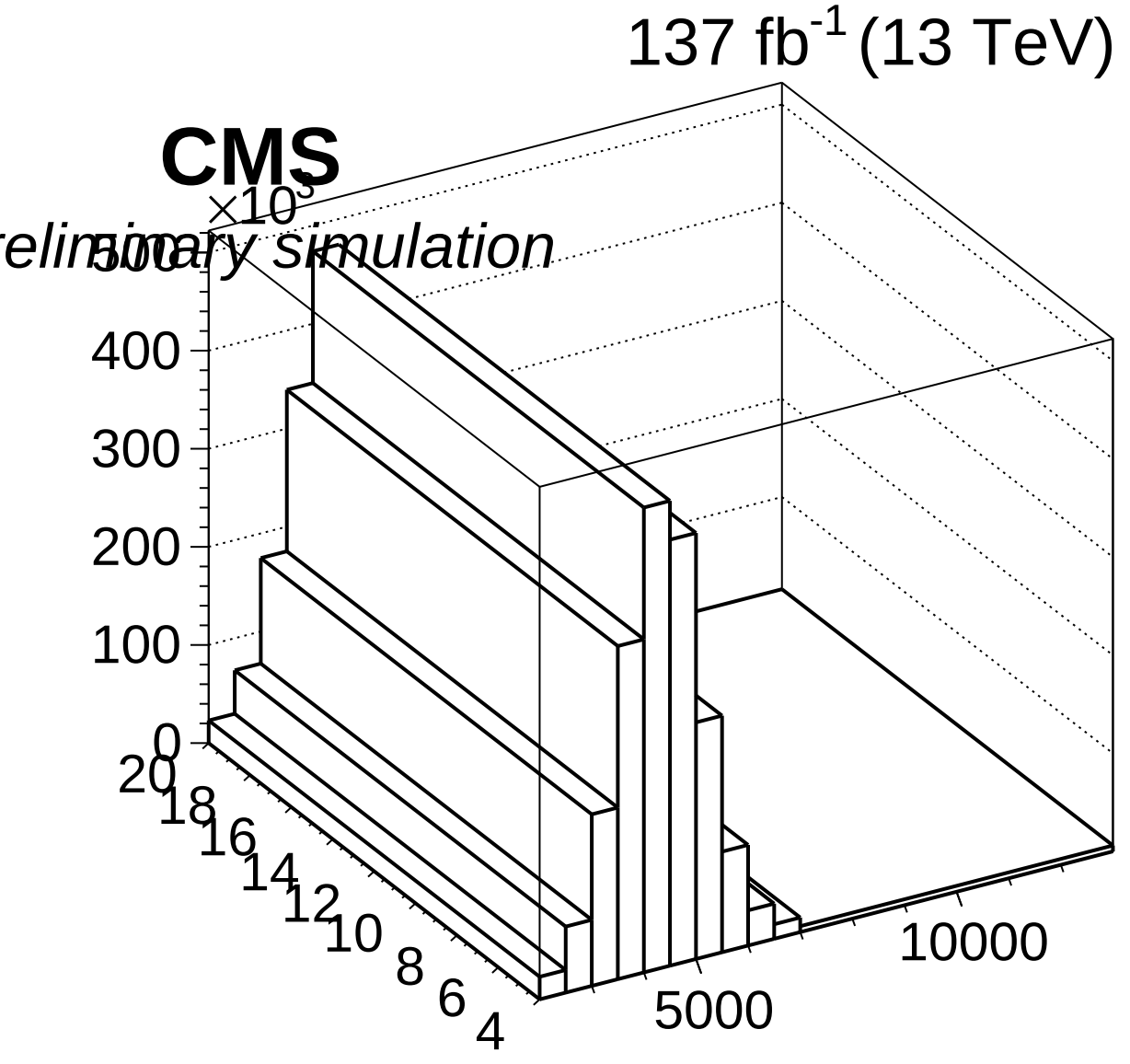
137 fb-1 (13 TeV)
CMS
Preliminary simulation
×10³
500
400
300
200
100
0
20
18
16
14
12
10
8
6
4
5000
10000