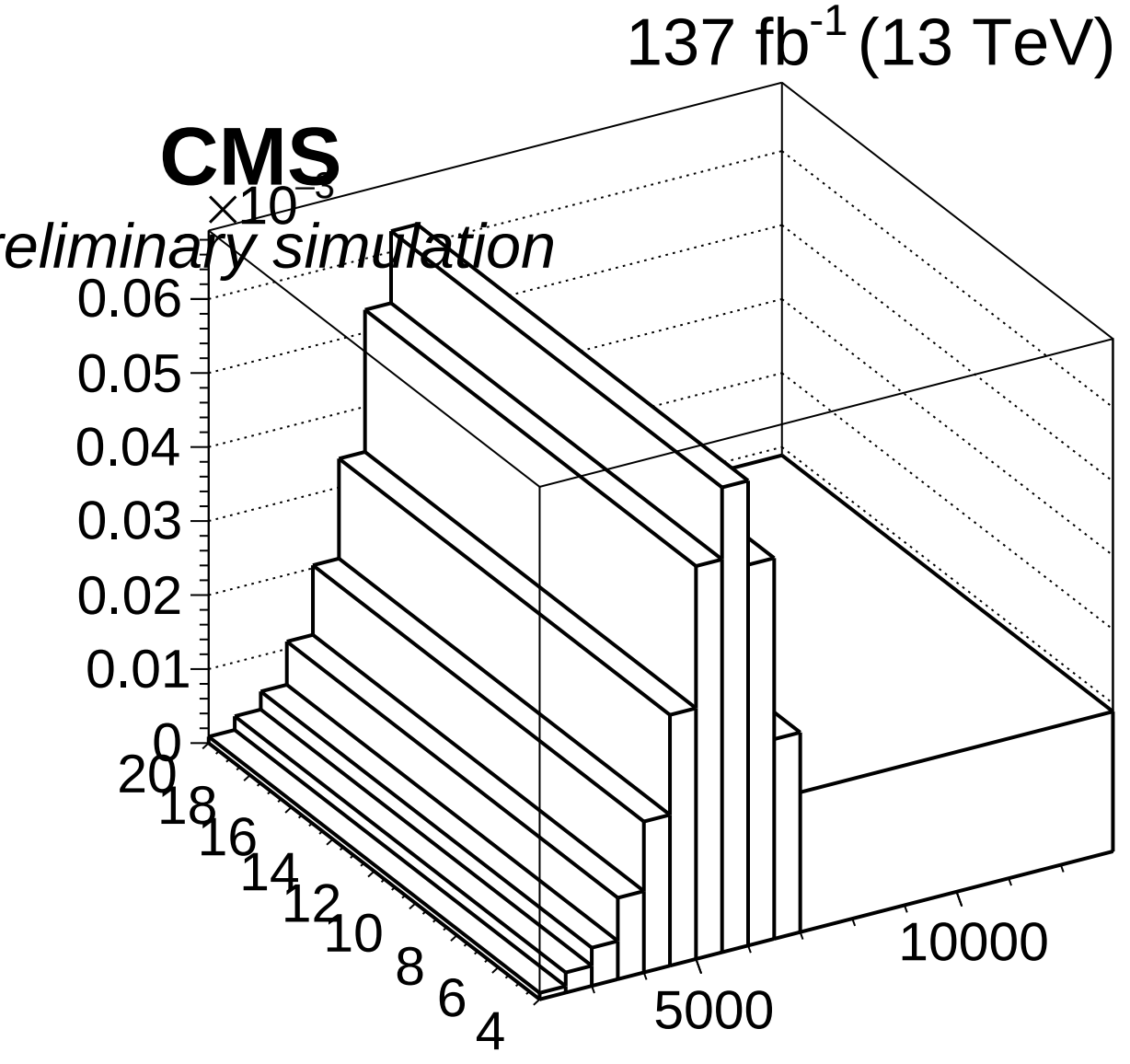
137 fb-1 (13 TeV)
CMS
Preliminary simulation
×10−3
0.06
0.05
0.04
0.03
0.02
0.01
0
20
18
16
14
12
10
8
6
4
5000
10000