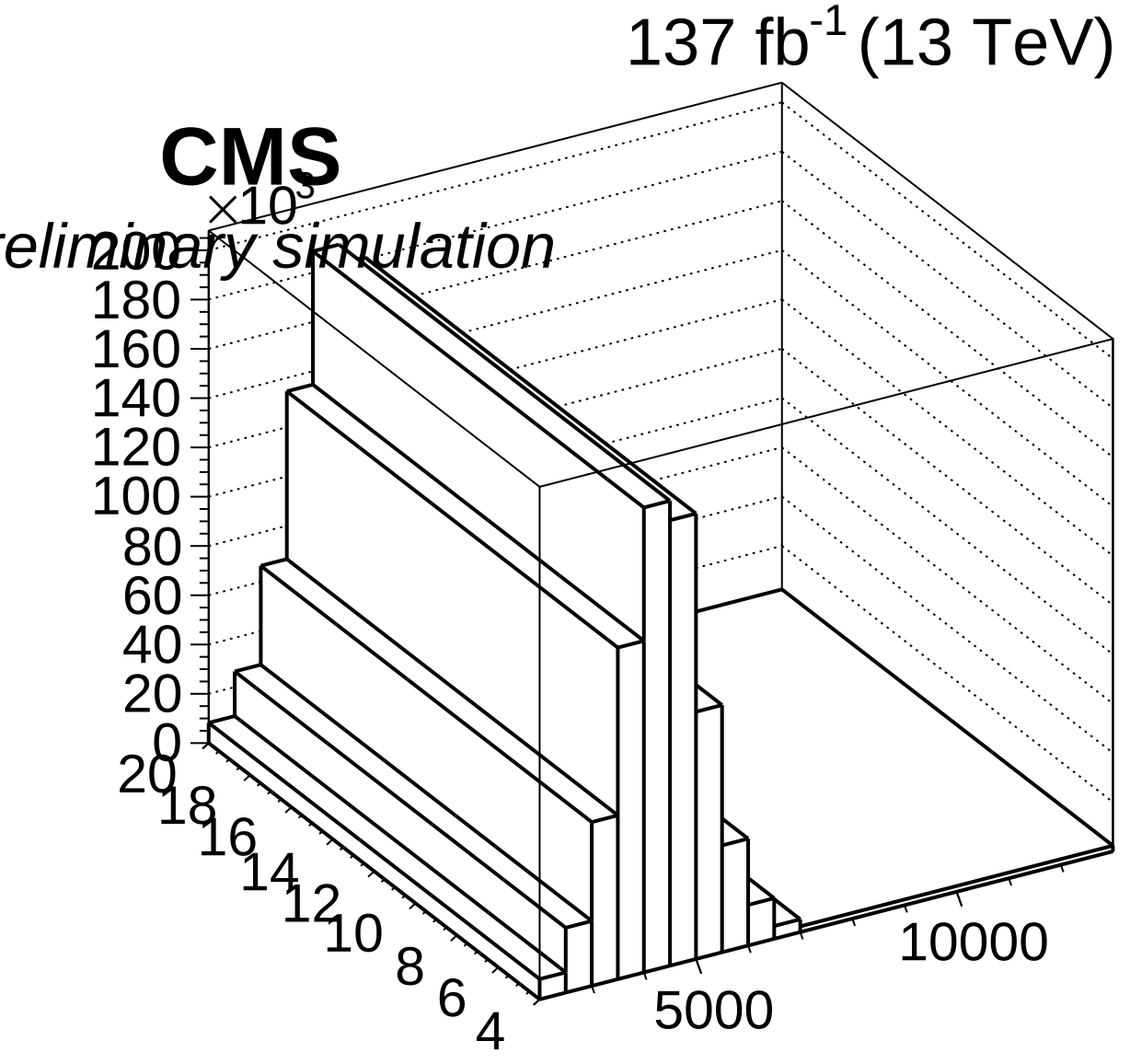
137 fb-1 (13 TeV)
CMS
Preliminary simulation
×10^3
200
180
160
140
120
100
80
60
40
20
0
20
18
16
14
12
10
8
6
4
5000
10000