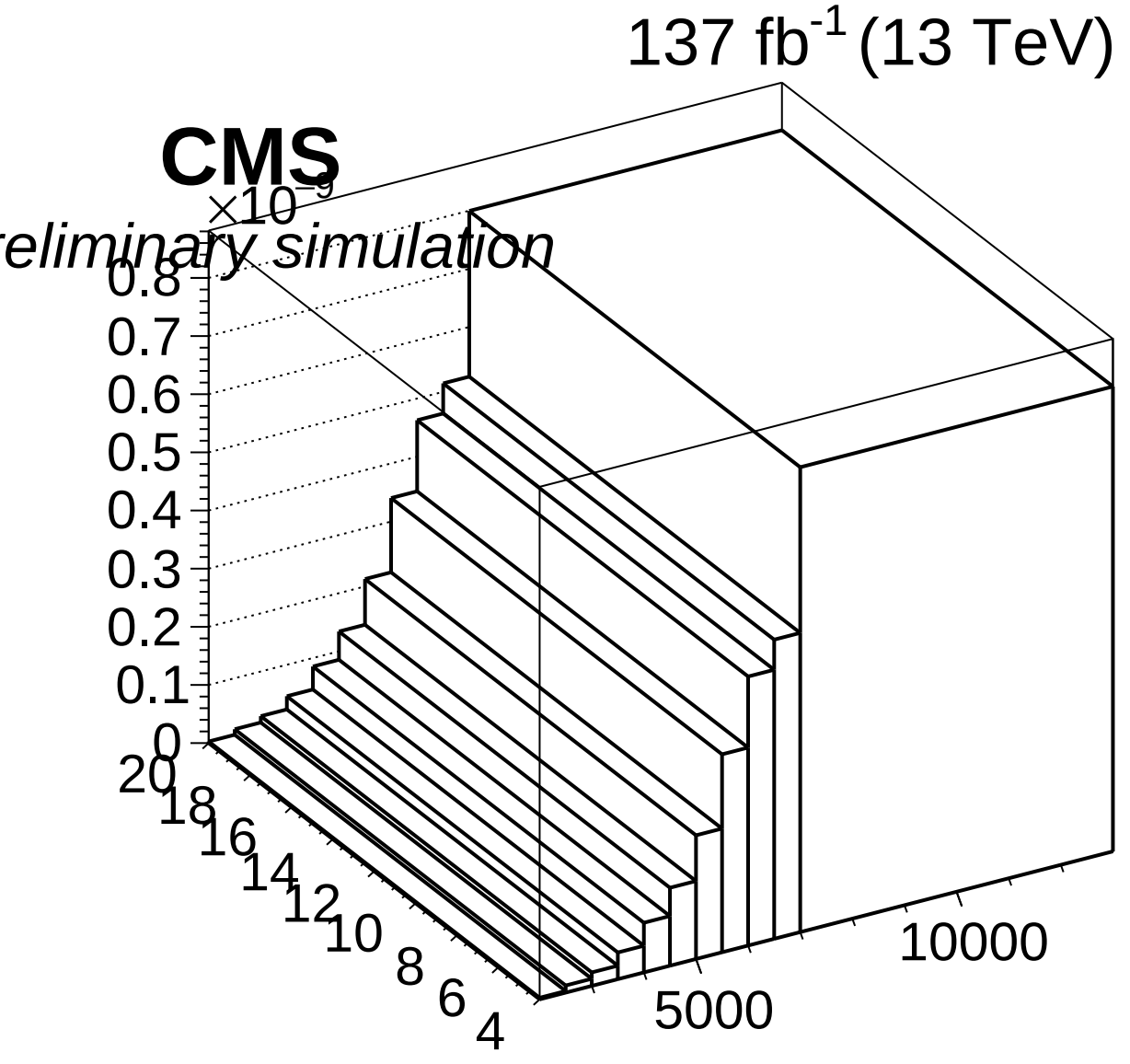
137 fb-1 (13 TeV)
CMS
Preliminary simulation
×10−9
0.8
0.7
0.6
0.5
0.4
0.3
0.2
0.1
0
20
18
16
14
12
10
8
6
4
5000
10000