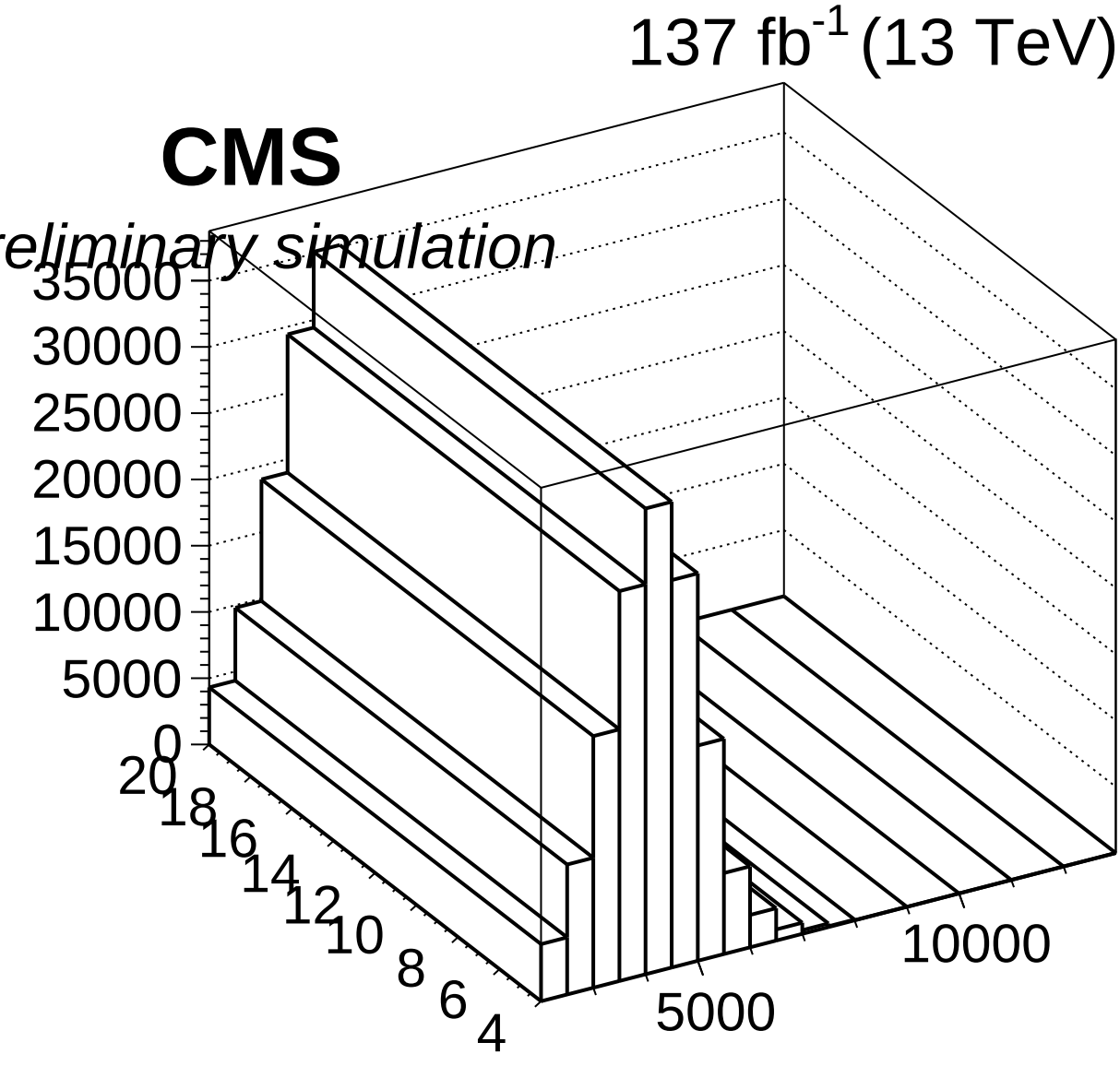
137 fb-1 (13 TeV)
CMS
Preliminary simulation
35000
30000
25000
20000
15000
10000
5000
0
20
18
16
14
12
10
8
6
4
5000
10000