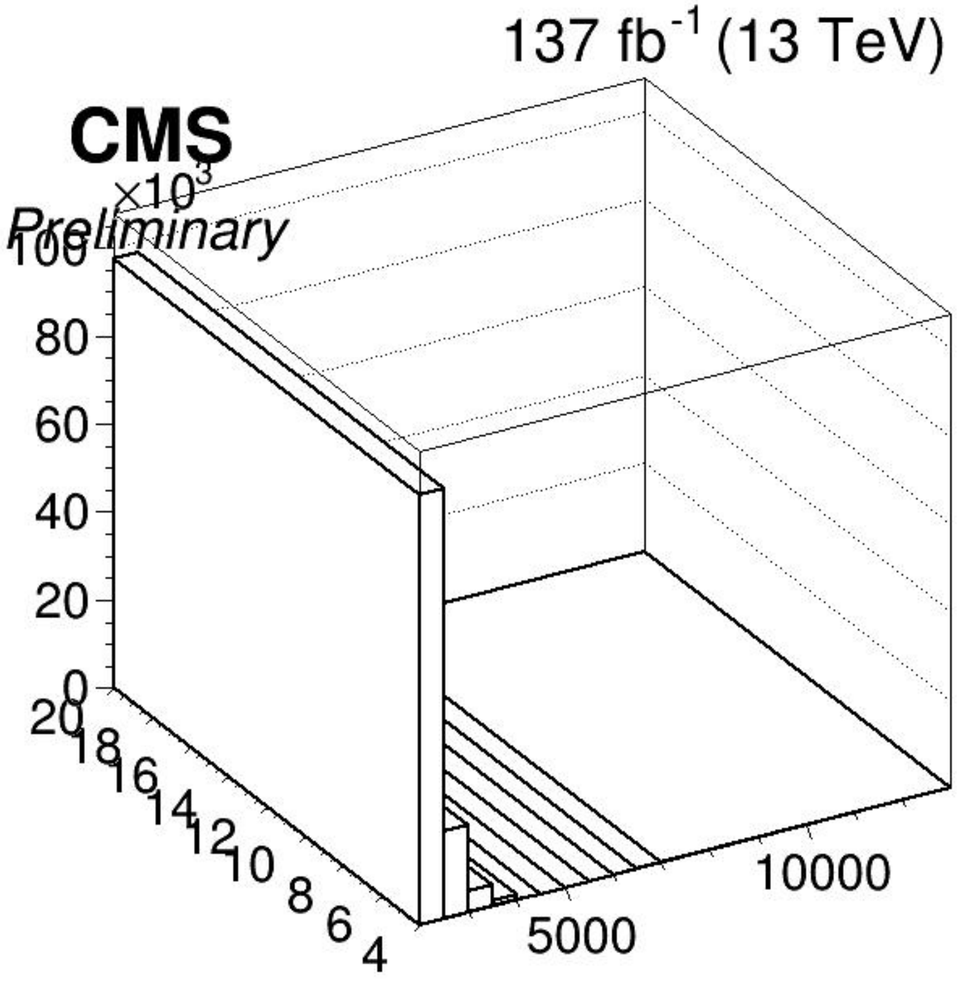
137 fb^{-1} (13 TeV)
CMS
Preliminary
×10^3
100
80
60
40
20
0
20
18
16
14
12
10
8
6
4
5000
10000

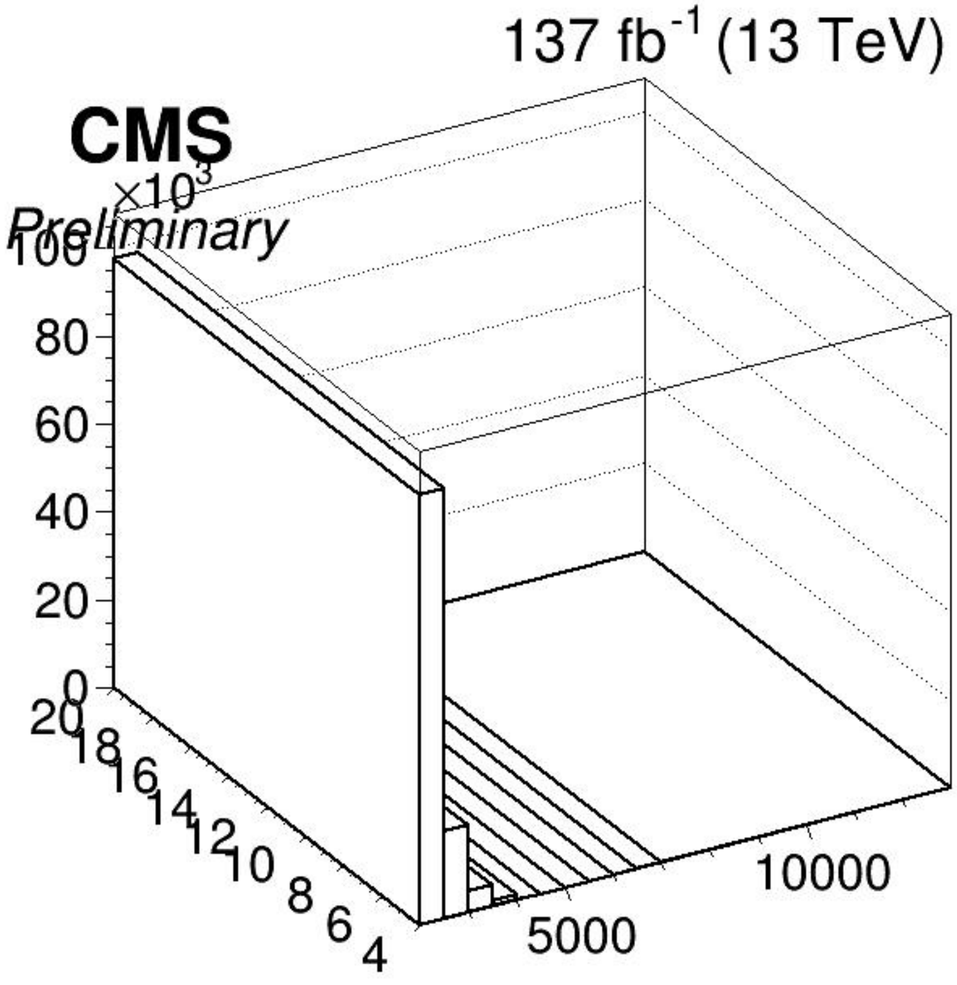
137 fb^{-1} (13 TeV)
CMS
Preliminary
×10^3
100
80
60
40
20
0
20
18
16
14
12
10
8
6
4
5000
10000