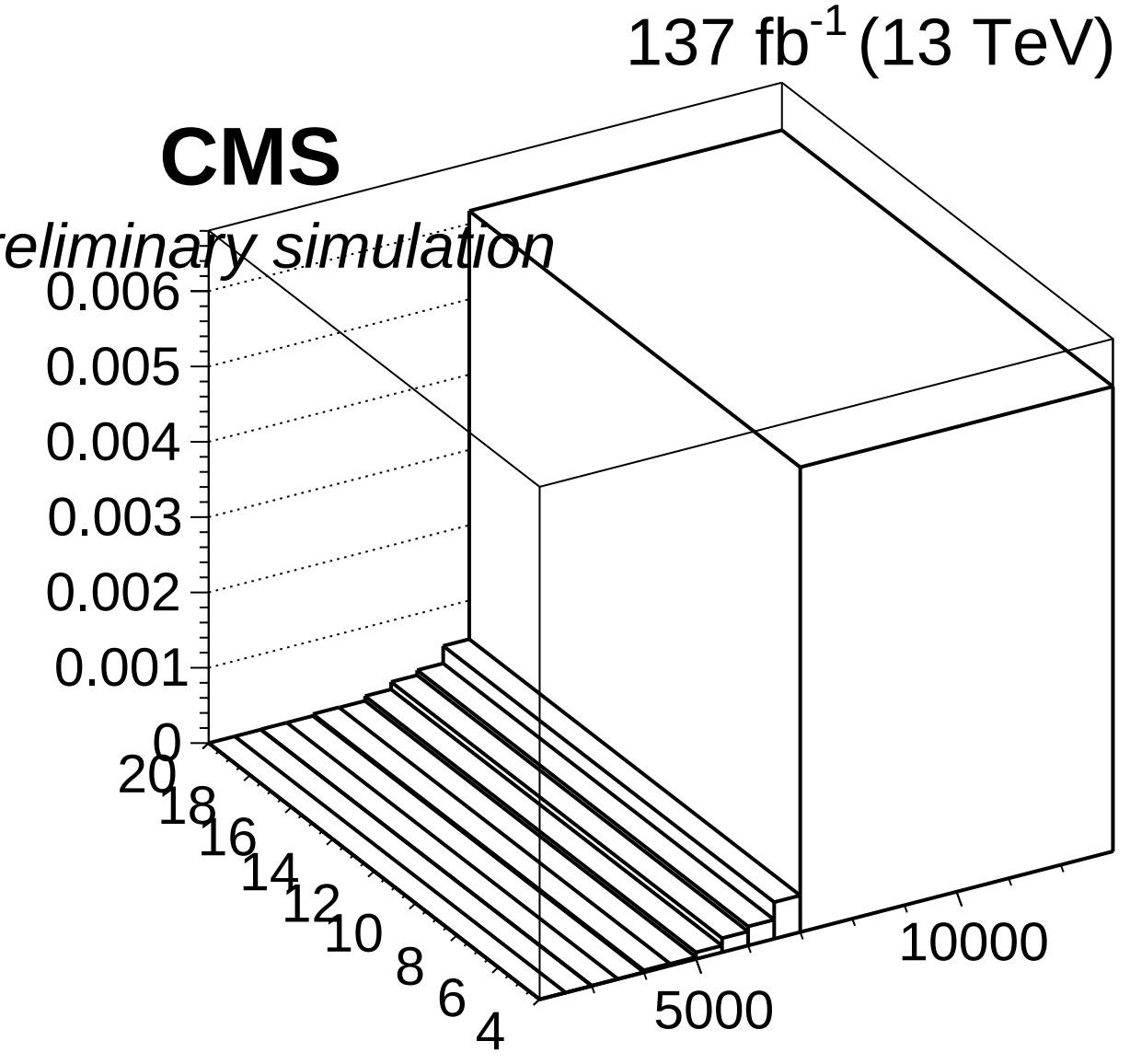
137 fb-1 (13 TeV)
CMS
Preliminary simulation
0.006
0.005
0.004
0.003
0.002
0.001
0
20
18
16
14
12
10
8
6
4
5000
10000