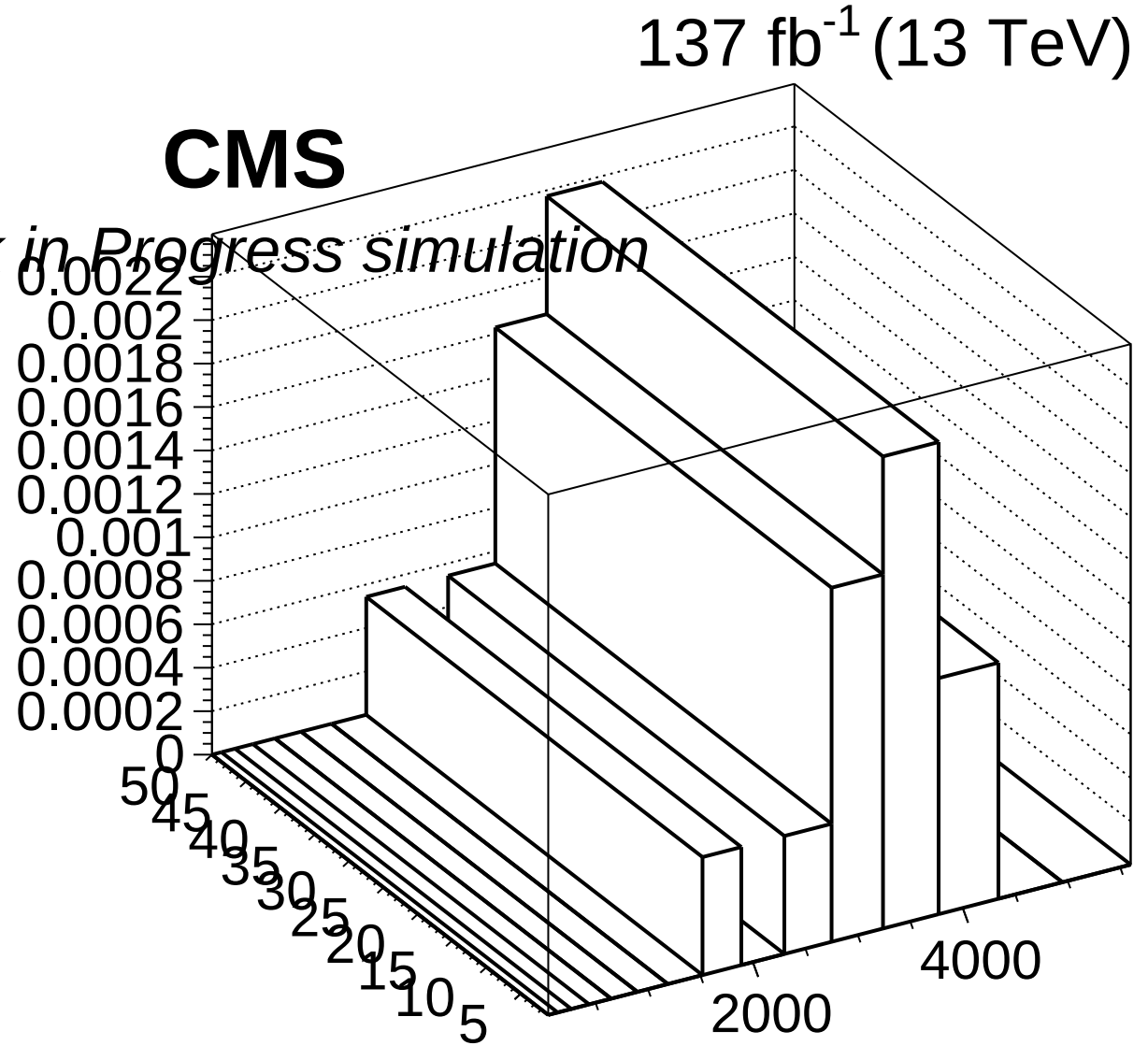
137 fb-1 (13 TeV)
CMS
in Progress simulation
0.0022
0.002
0.0018
0.0016
0.0014
0.0012
0.001
0.0008
0.0006
0.0004
0.0002
0
50
45
40
35
30
25
20
15
10
5
2000
4000