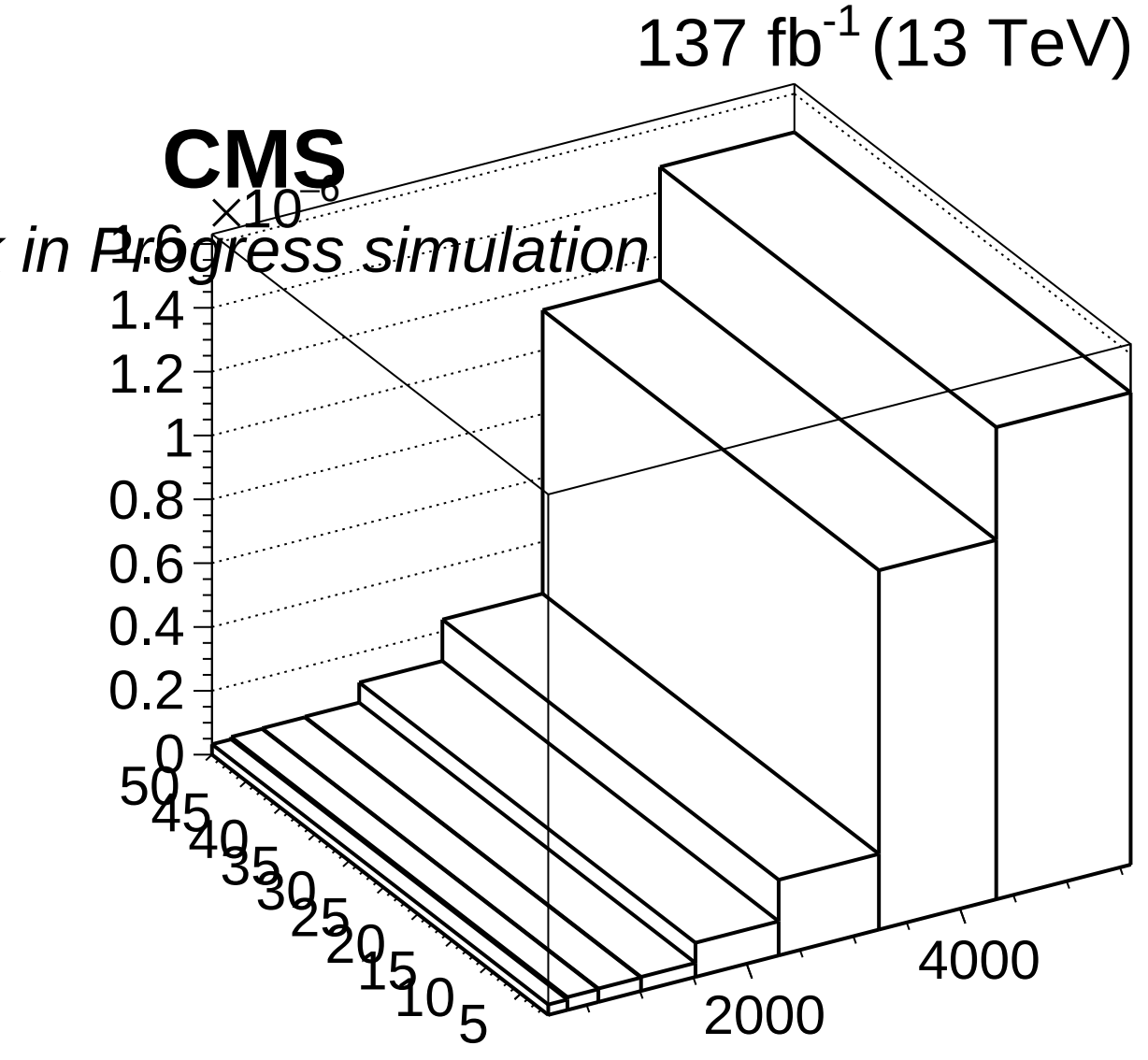
137 fb-1 (13 TeV)
CMS
in Progress simulation
×10−6
1.6
1.4
1.2
1
0.8
0.6
0.4
0.2
0
50
45
40
35
30
25
20
15
10
5
2000
4000