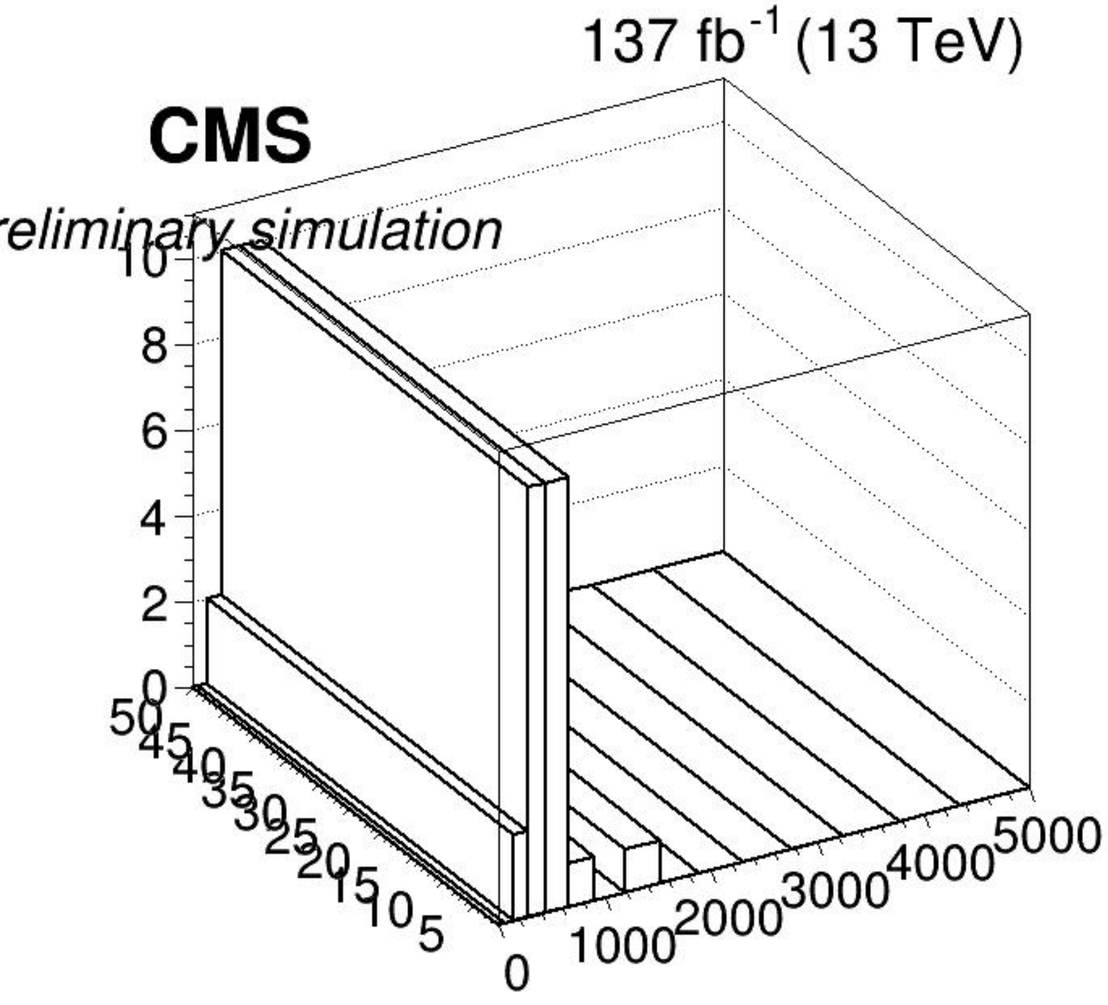
137 fb^{-1} (13 TeV)
CMS
Preliminary simulation
10
8
6
4
2
0
50
45
40
35
30
25
20
15
10
5
0
1000
2000
3000
4000
5000

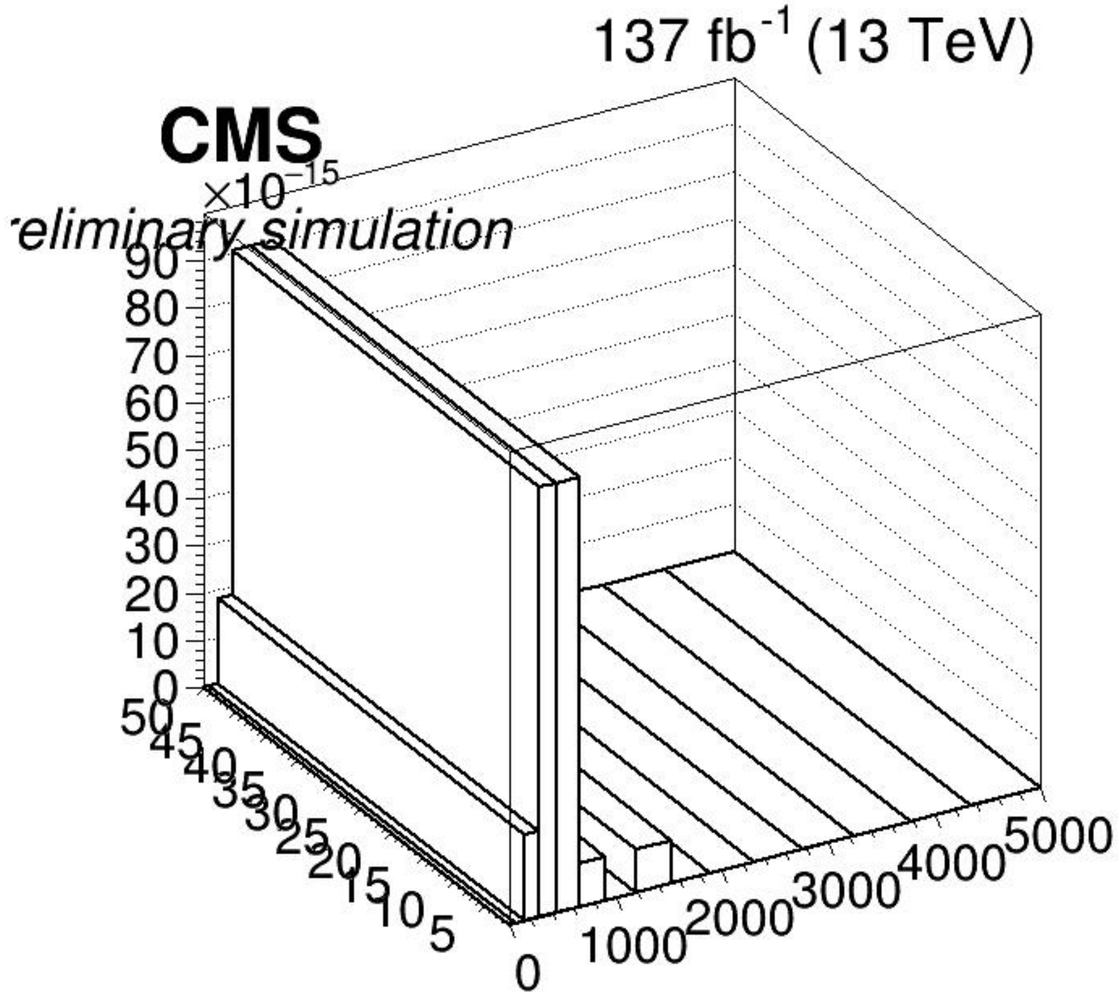
137 fb^{-1} (13 TeV)
CMS
Preliminary simulation
$\times 10^{-15}$
90
80
70
60
50
40
30
20
10
0
50
45
40
35
30
25
20
15
10
5
0
1000
2000
3000
4000
5000