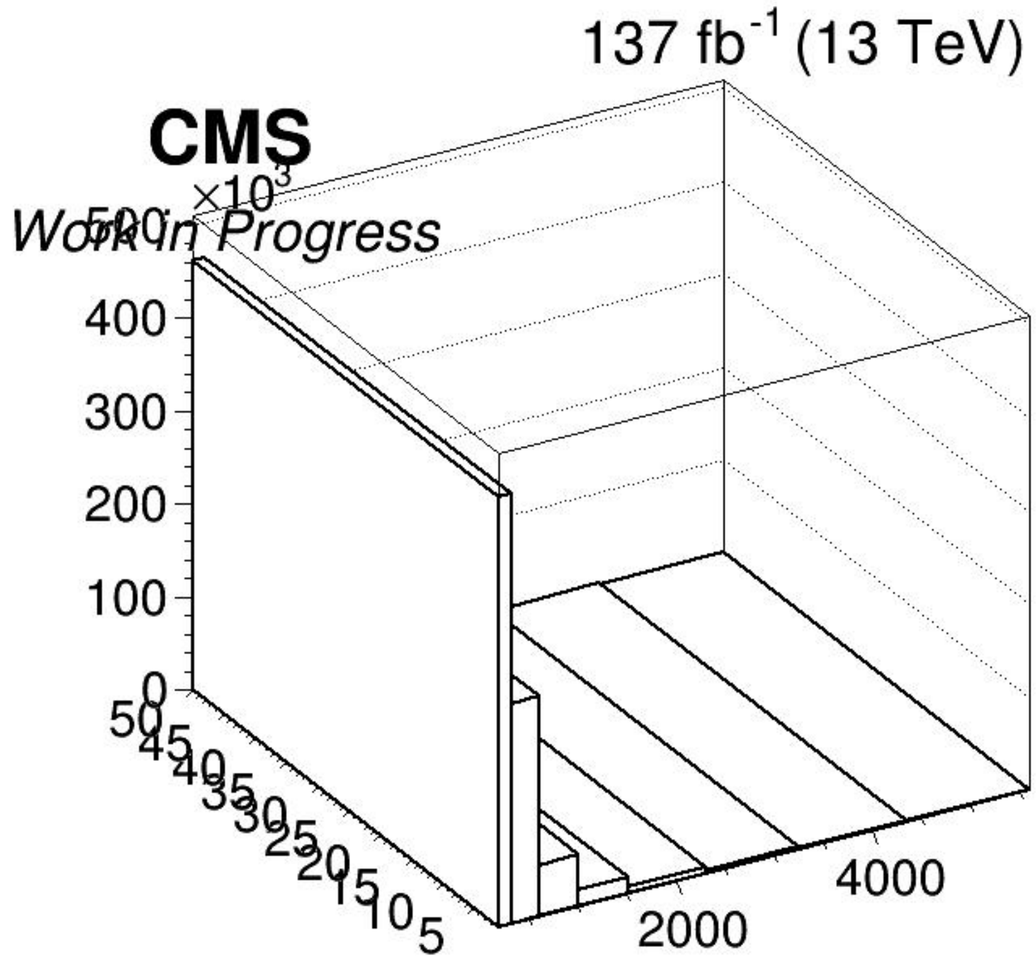
137 fb^{-1} (13 TeV)
CMS
Work in Progress
$\times 10^3$
500
400
300
200
100
0
50
45
40
35
30
25
20
15
10
5
2000
4000

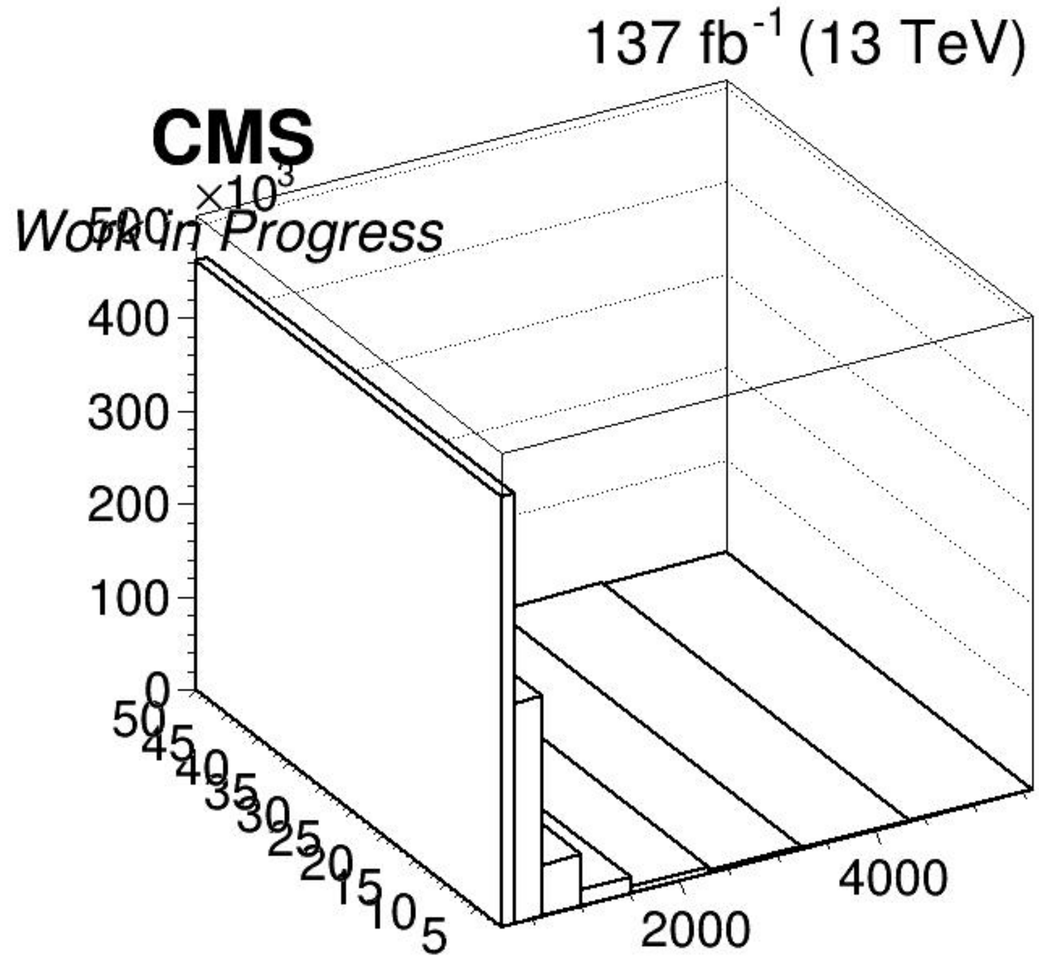
137 fb^{-1} (13 TeV)
CMS
Work in Progress
$\times 10^3$
500
400
300
200
100
0
50
45
40
35
30
25
20
15
10
5
2000
4000