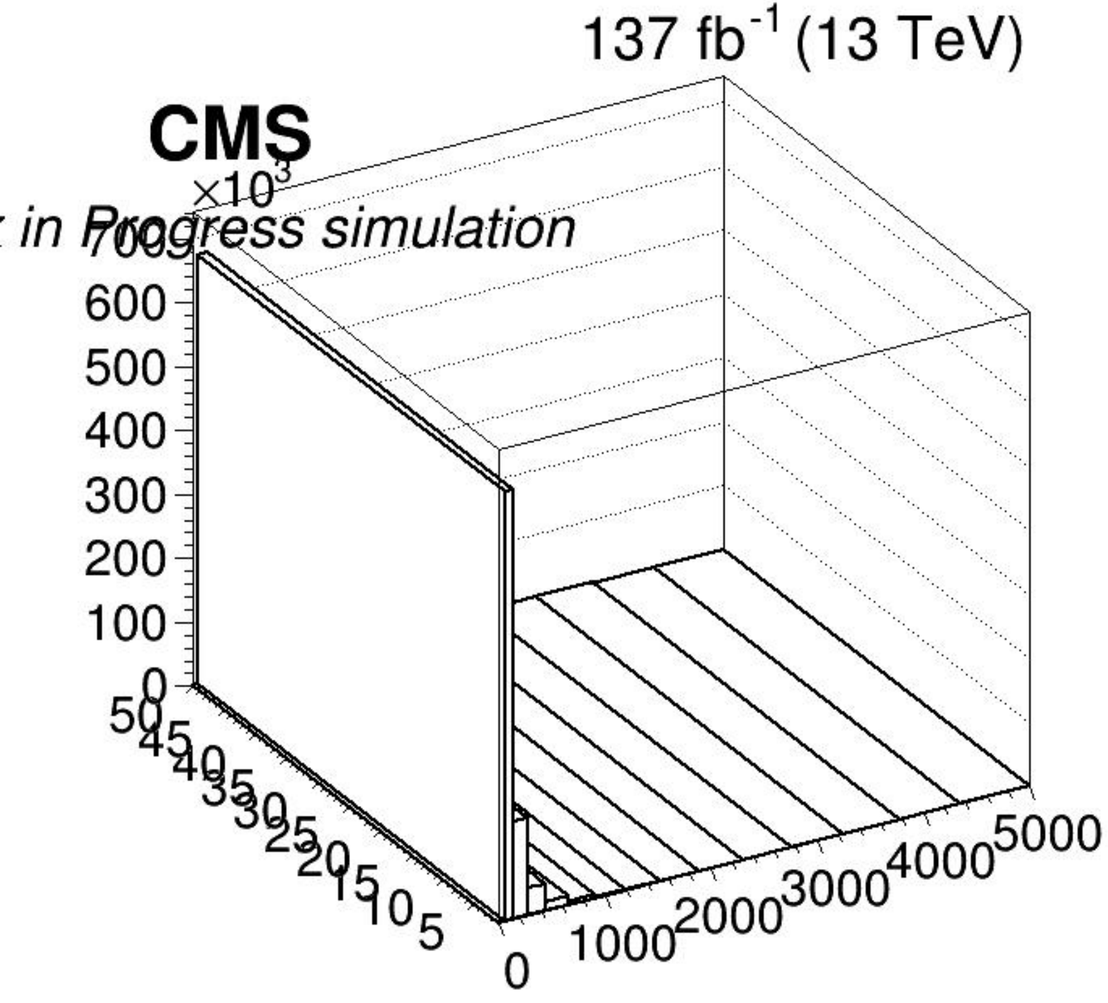
137 fb^{-1} (13 TeV)
CMS
in Progress simulation
×10^3
700
600
500
400
300
200
100
0
50
45
40
35
30
25
20
15
10
5
0
1000
2000
3000
4000
5000

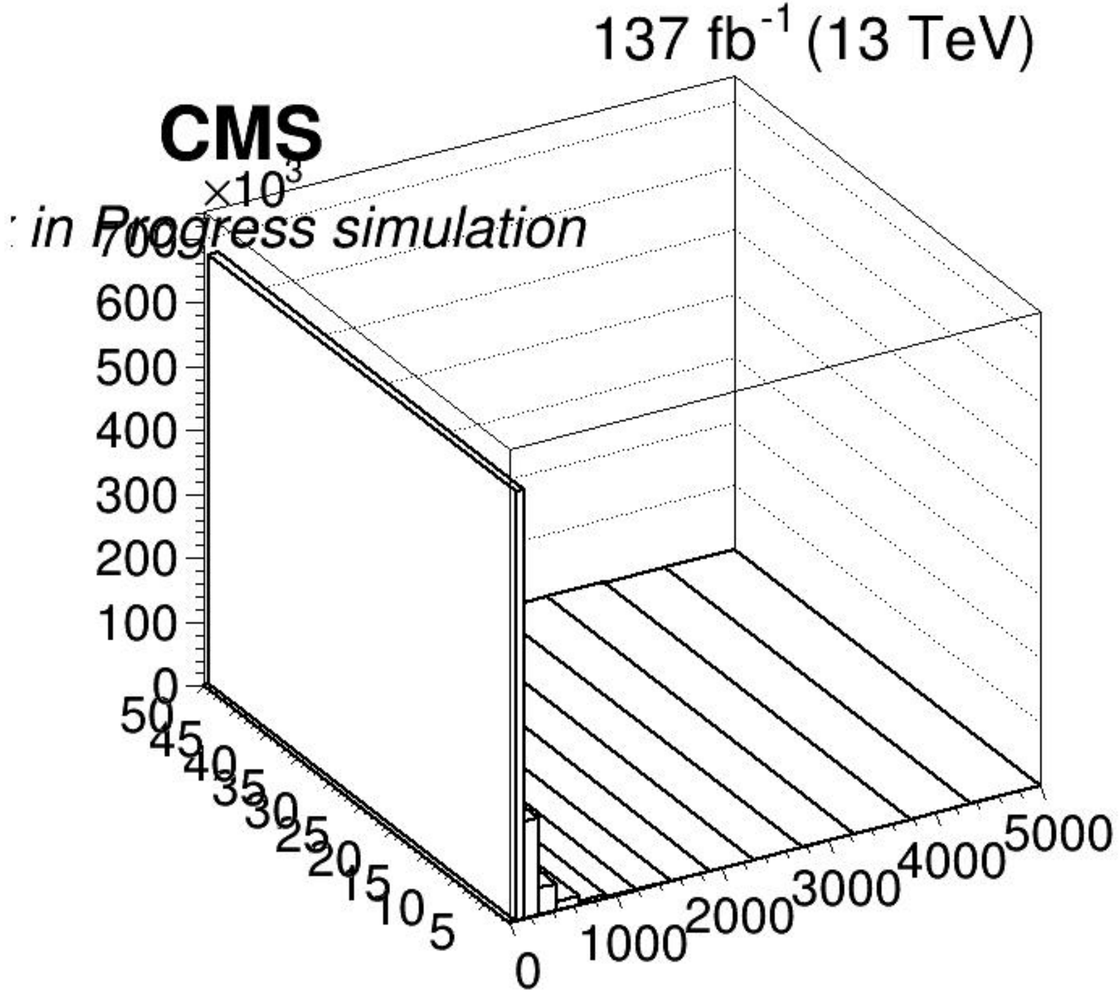
137 fb^{-1} (13 TeV)
CMS
in Progress simulation
×10^3
700
600
500
400
300
200
100
0
50
45
40
35
30
25
20
15
10
5
0
1000
2000
3000
4000
5000