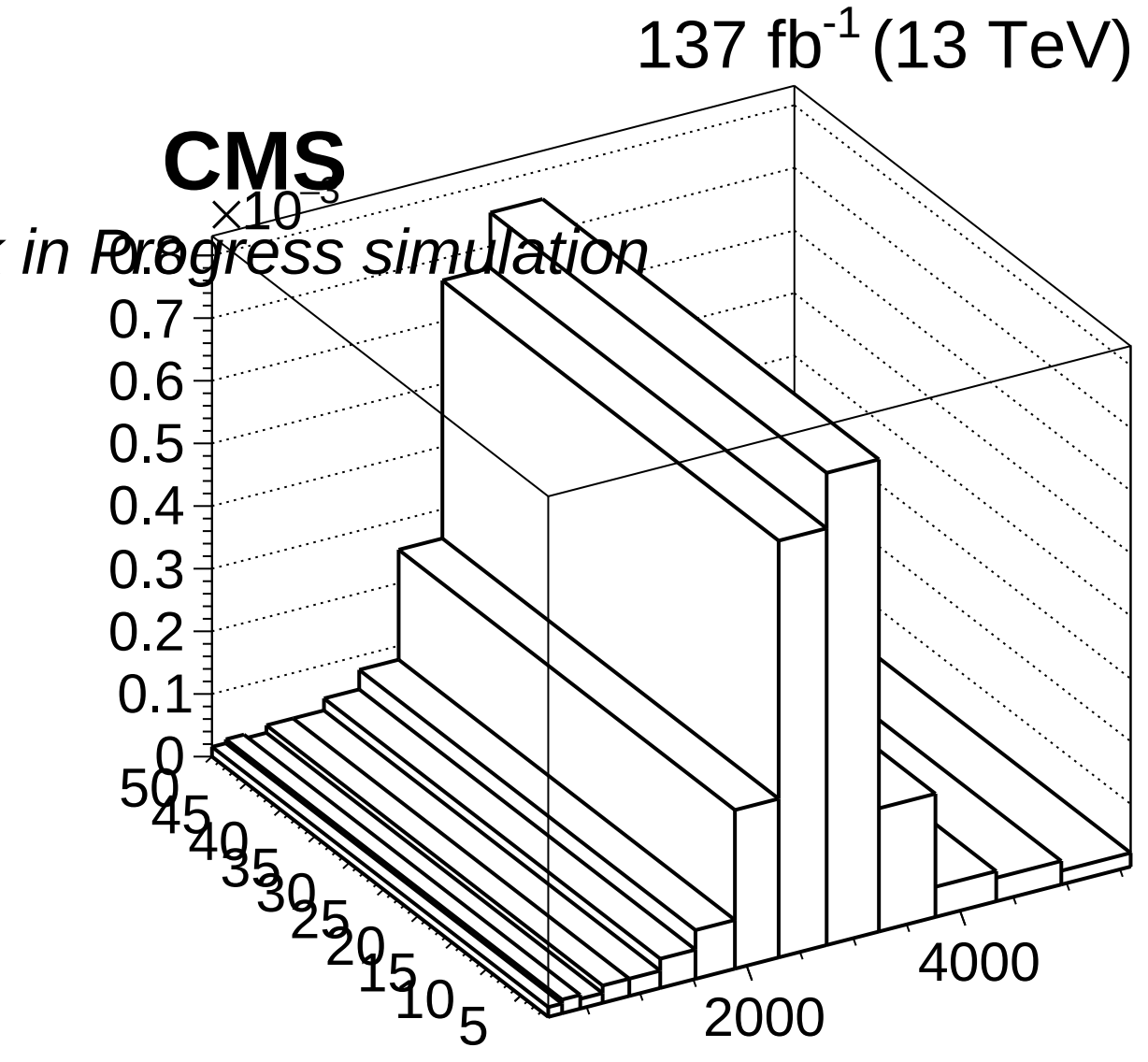
137 fb-1 (13 TeV)
CMS
in Progress simulation
×10−3
0.8
0.7
0.6
0.5
0.4
0.3
0.2
0.1
0
50
45
40
35
30
25
20
15
10
5
2000
4000