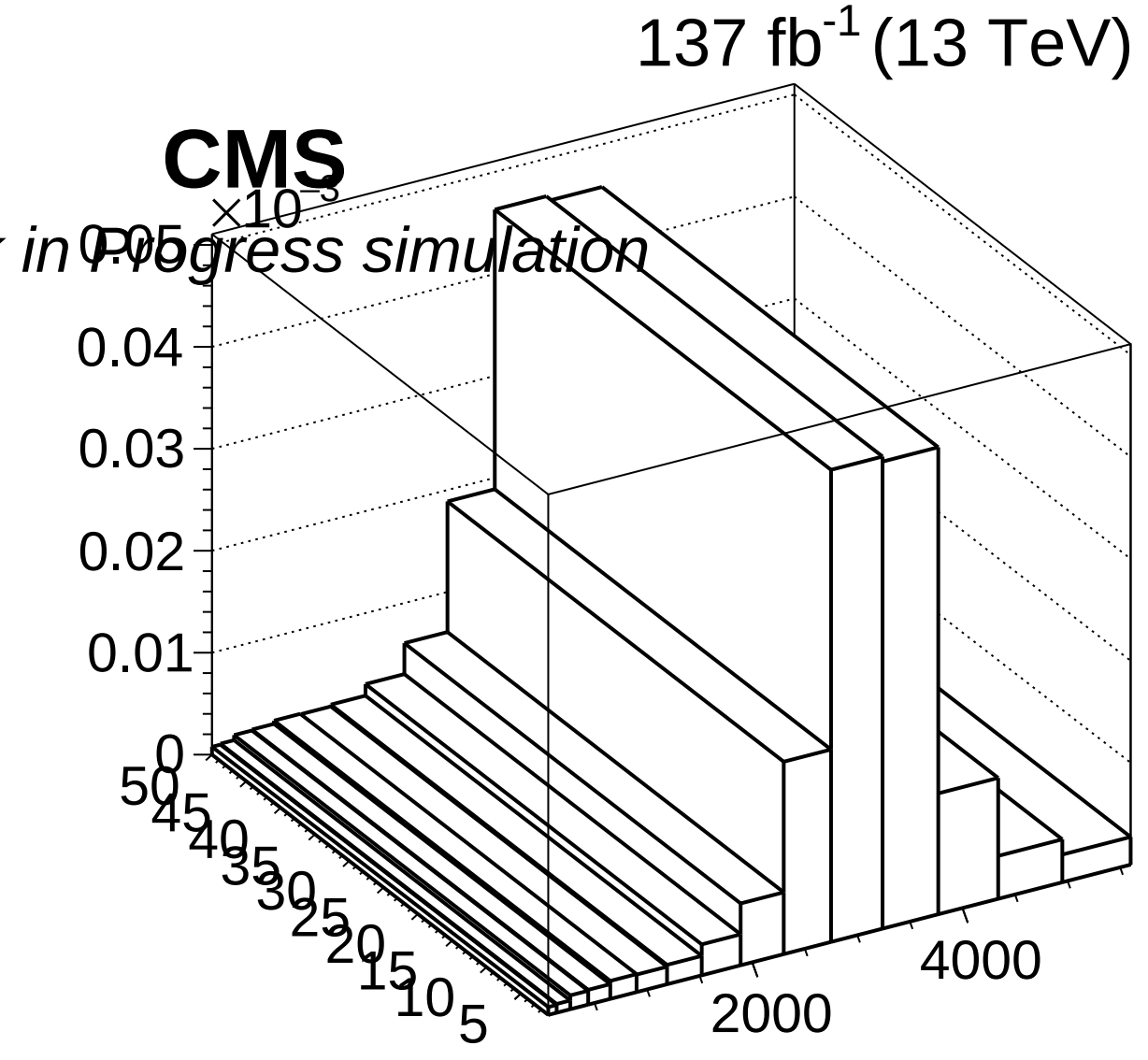
137 fb-1 (13 TeV)
CMS
in Progress simulation
×10−3
0.05
0.04
0.03
0.02
0.01
0
50
45
40
35
30
25
20
15
10
5
2000
4000