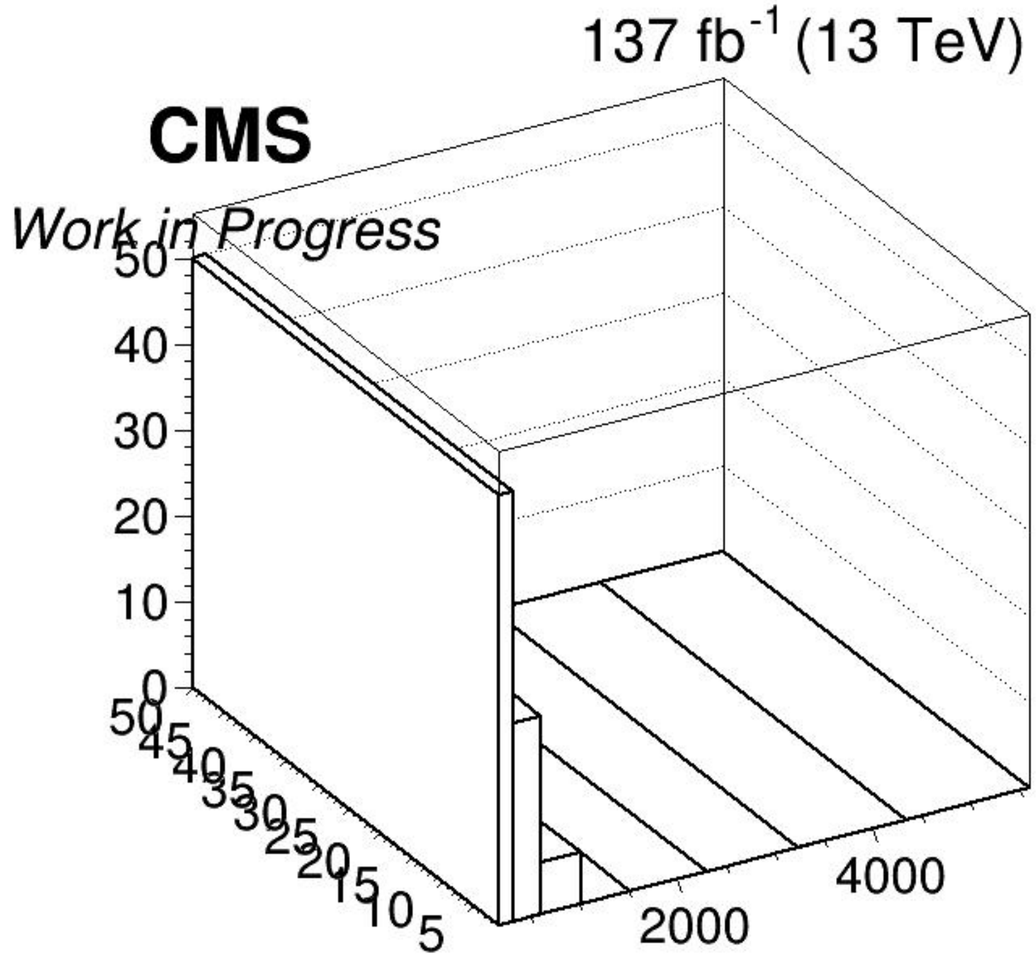
137 fb^{-1} (13 TeV)
CMS
Work in Progress
50
40
30
20
10
0
50
45
40
35
30
25
20
15
10
5
2000
4000

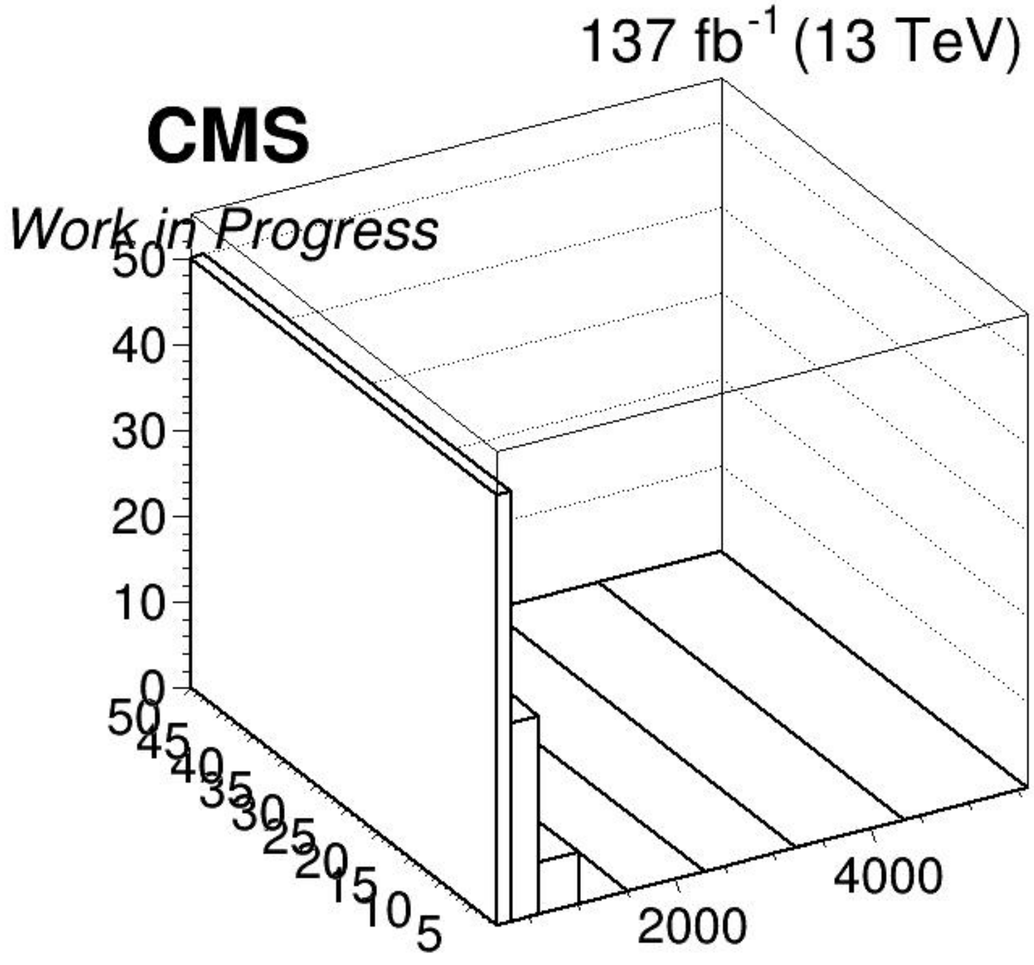
137 fb^{-1} (13 TeV)
CMS
Work in Progress
50
40
30
20
10
0
50
45
40
35
30
25
20
15
10
5
2000
4000