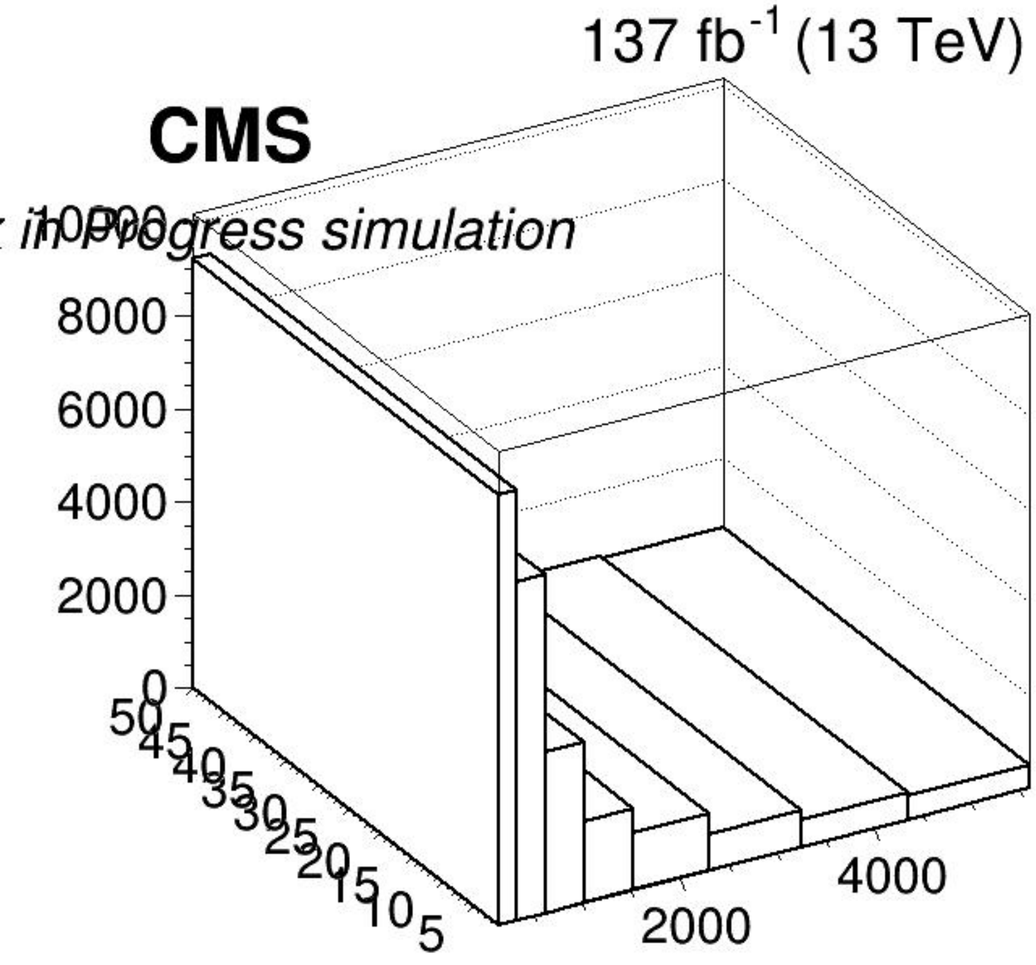
137 fb^{-1} (13 TeV)
CMS
in Progress simulation
10000
8000
6000
4000
2000
0
50
45
40
35
30
25
20
15
10
5
2000
4000

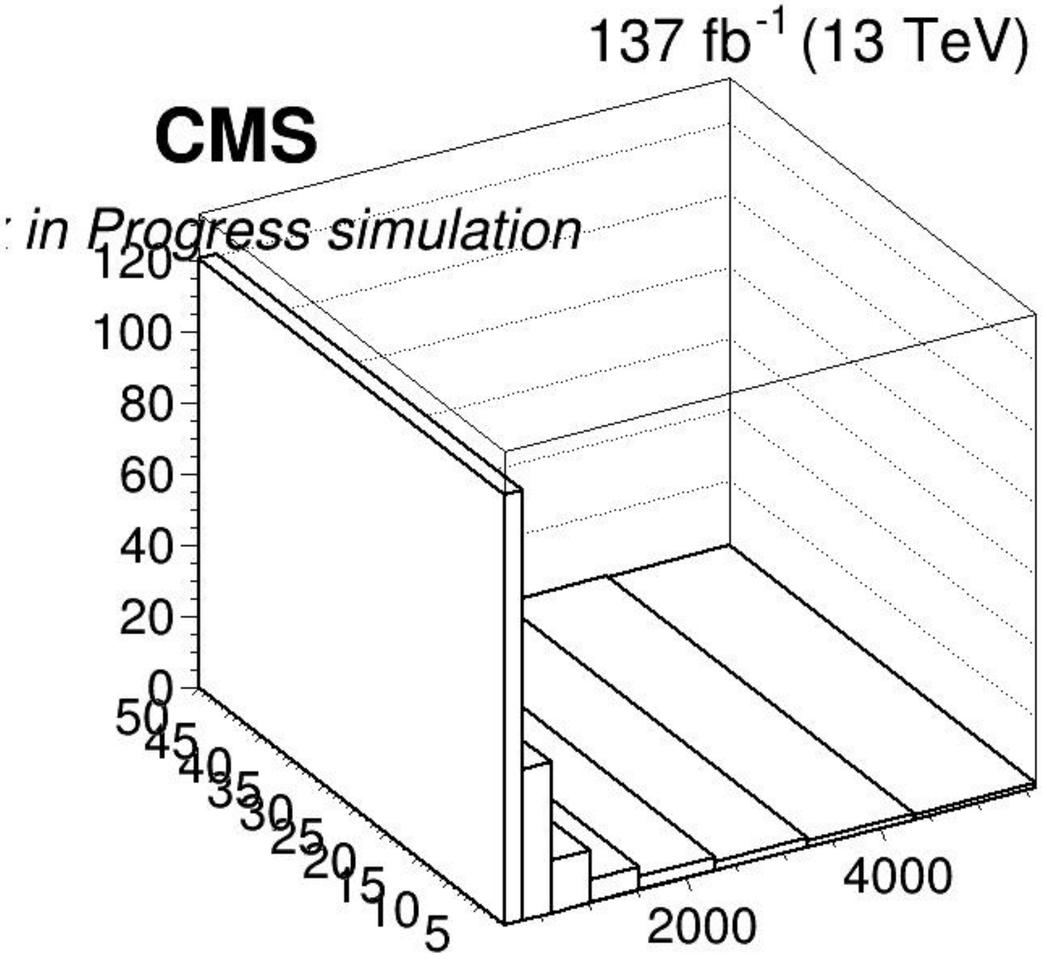
137 fb^{-1} (13 TeV)
CMS
in Progress simulation
120
100
80
60
40
20
0
50
45
40
35
30
25
20
15
10
5
2000
4000