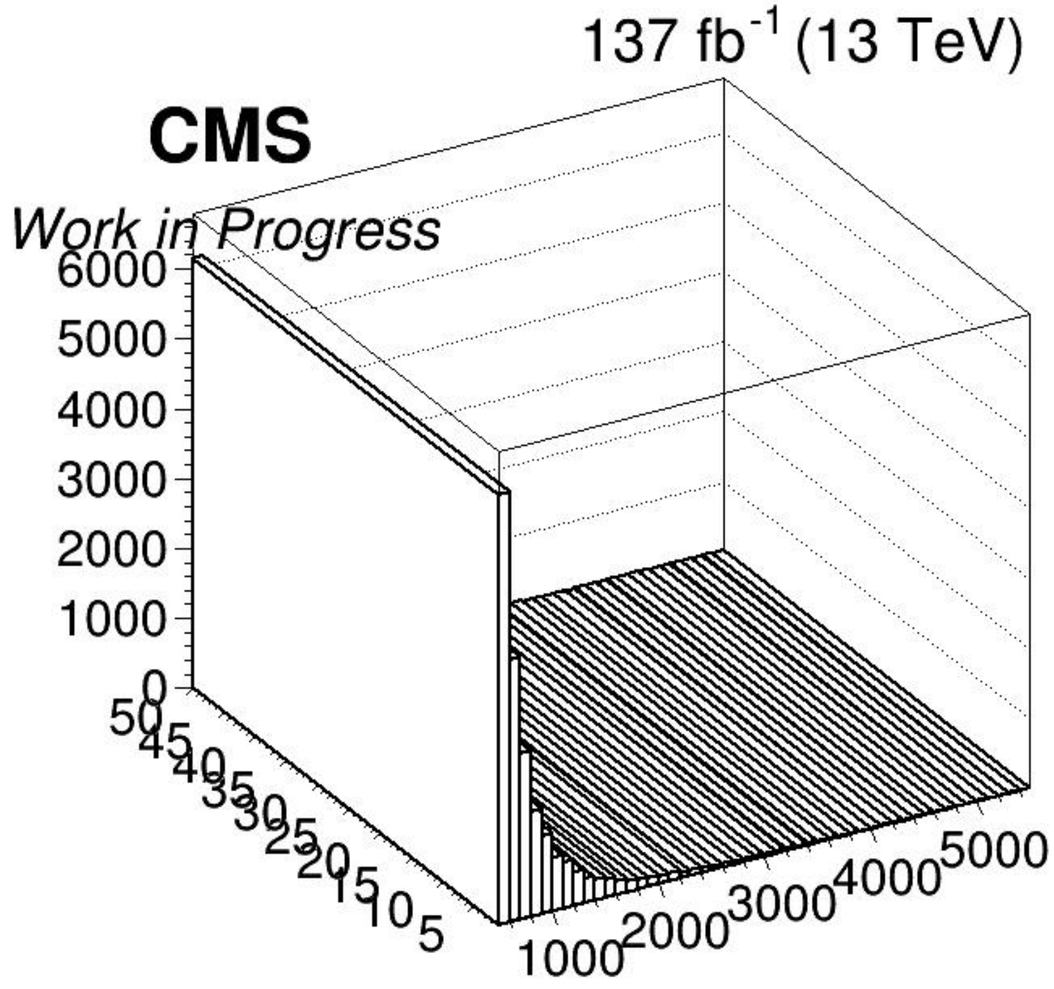
137 fb^{-1} (13 TeV)
CMS
Work in Progress
6000
5000
4000
3000
2000
1000
0
50
45
40
35
30
25
20
15
10
5
1000
2000
3000
4000
5000

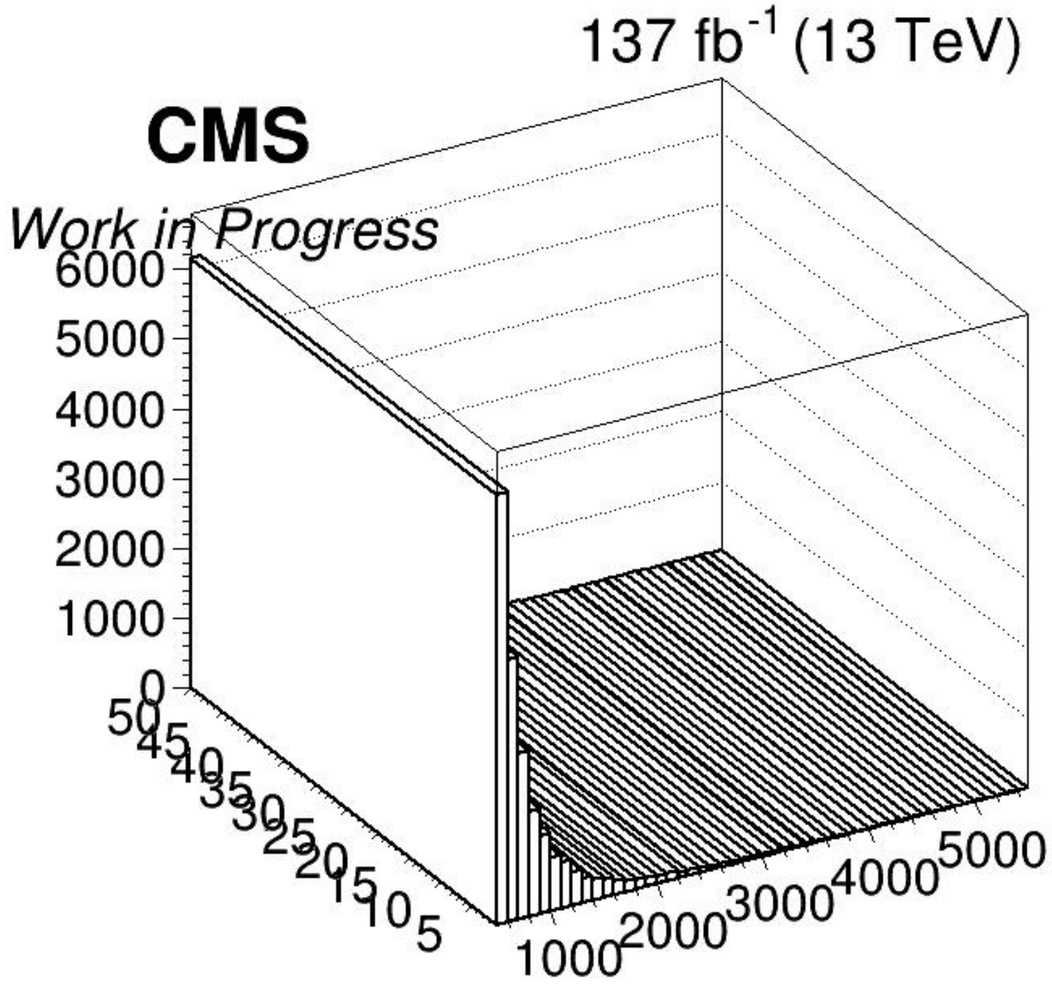
137 fb^{-1} (13 TeV)
CMS
Work in Progress
6000
5000
4000
3000
2000
1000
0
50
45
40
35
30
25
20
15
10
5
1000
2000
3000
4000
5000