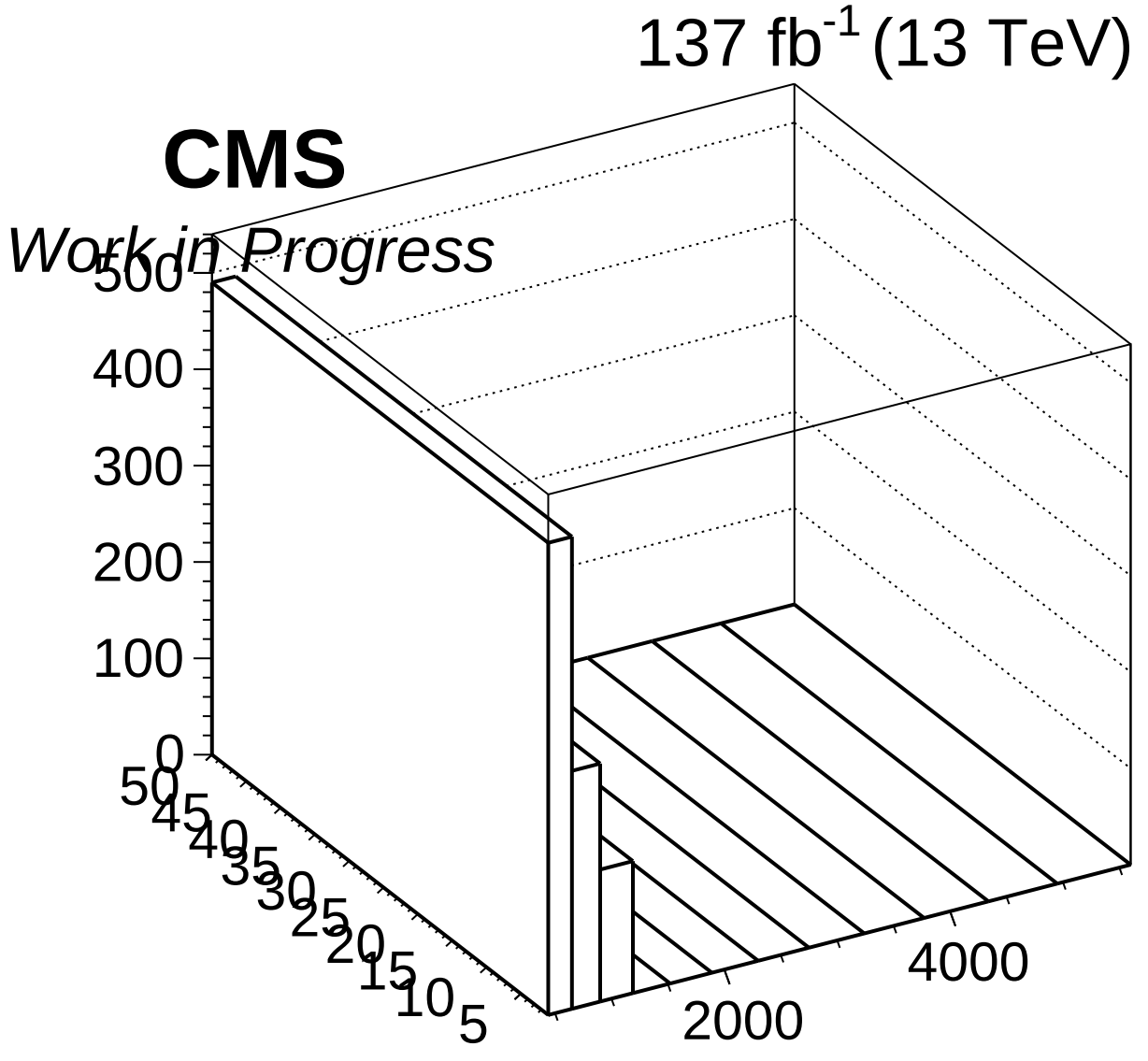
137 fb-1 (13 TeV)
CMS
Work in Progress
500
400
300
200
100
0
50
45
40
35
30
25
20
15
10
5
2000
4000