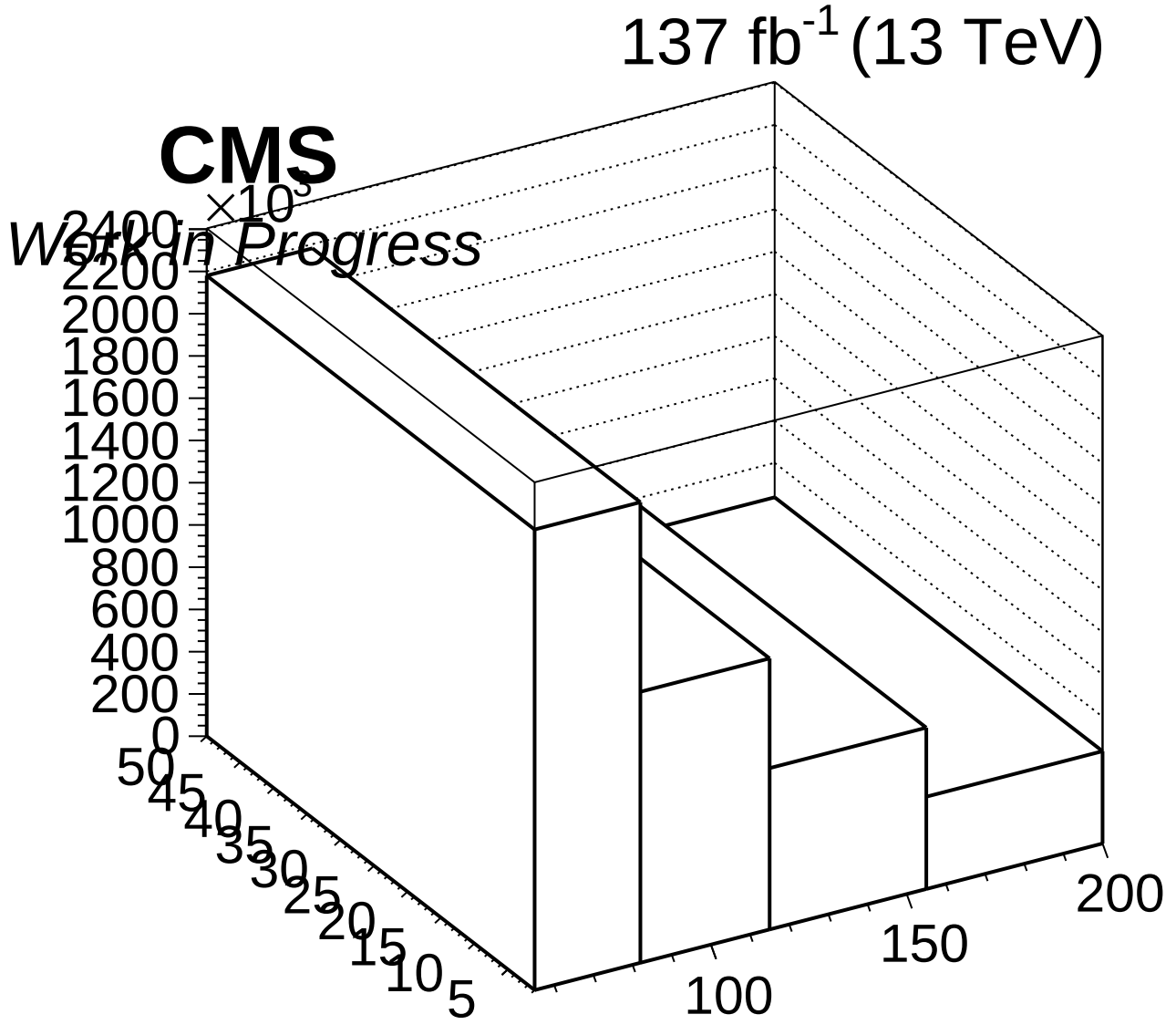
137 fb-1 (13 TeV)
CMS
Work in Progress
×10^3
2400
2200
2000
1800
1600
1400
1200
1000
800
600
400
200
0
50
45
40
35
30
25
20
15
10
5
100
150
200