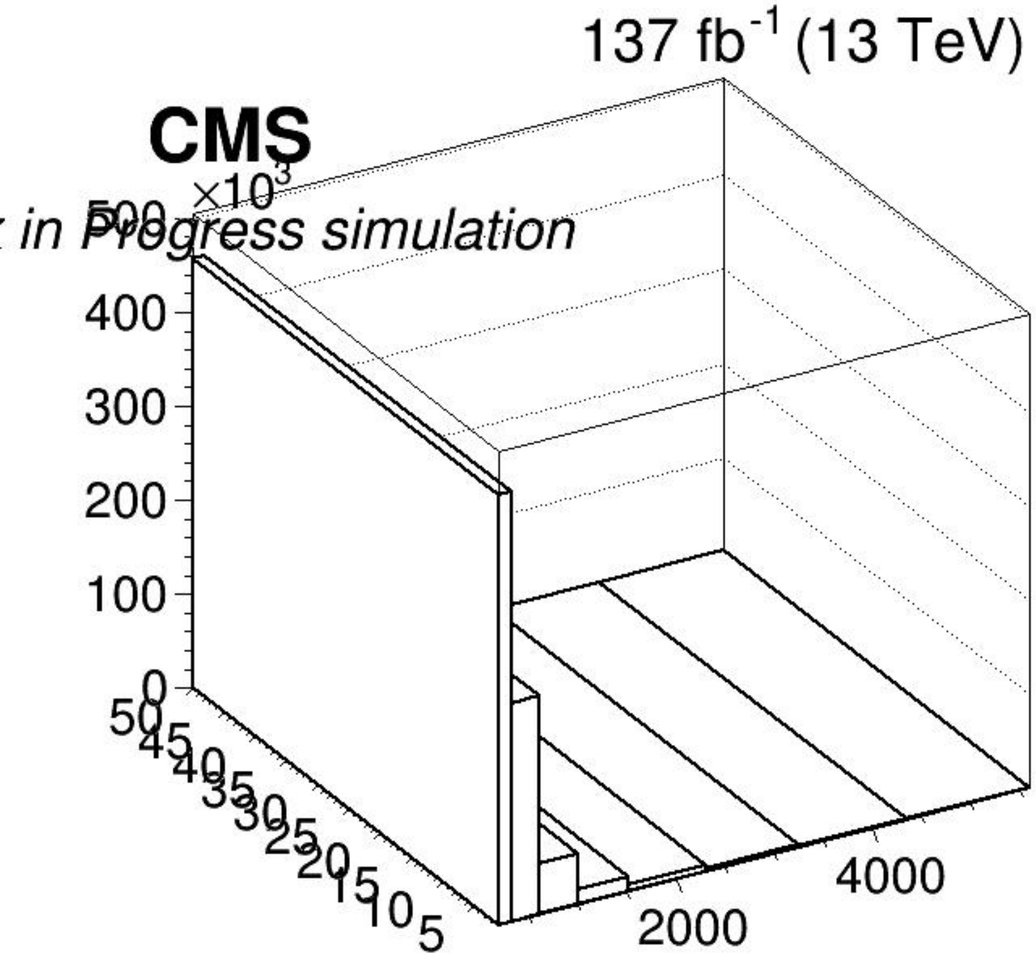
137 fb^{-1} (13 TeV)
CMS
in Progress simulation
×10^3
500
400
300
200
100
0
50
45
40
35
30
25
20
15
10
5
2000
4000

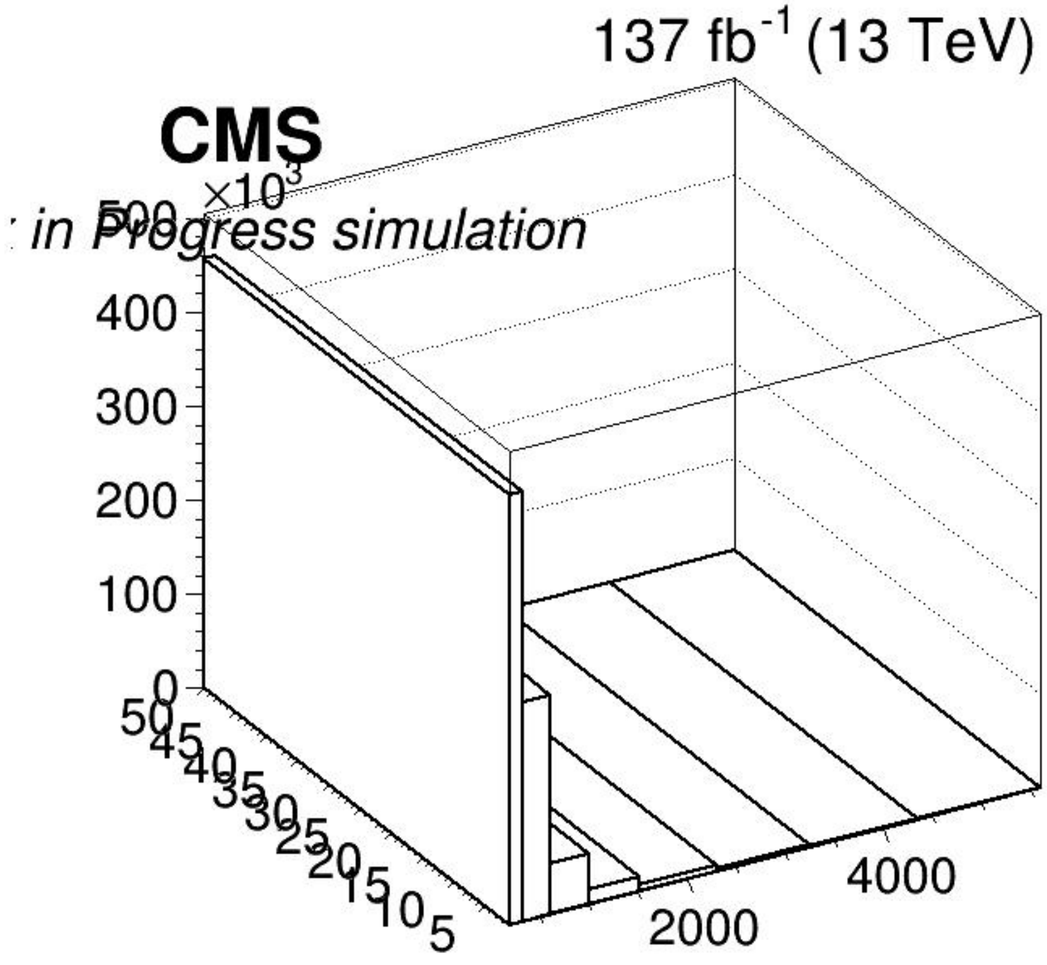
137 fb^{-1} (13 TeV)
CMS
in Progress simulation
×10^3
500
400
300
200
100
0
50
45
40
35
30
25
20
15
10
5
2000
4000