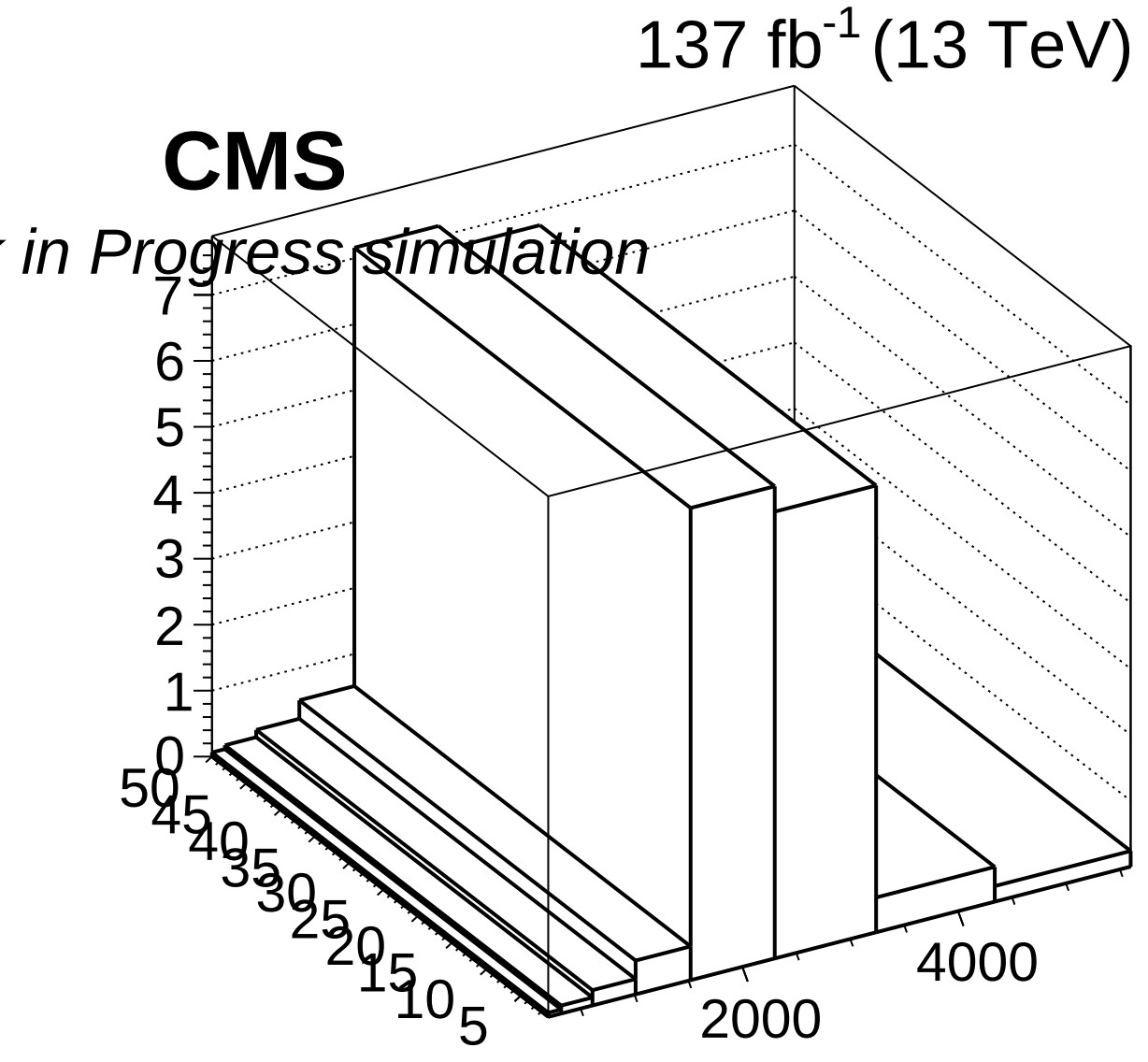
137 fb-1 (13 TeV)
CMS
in Progress simulation
7
6
5
4
3
2
1
0
50
45
40
35
30
25
20
15
10
5
2000
4000