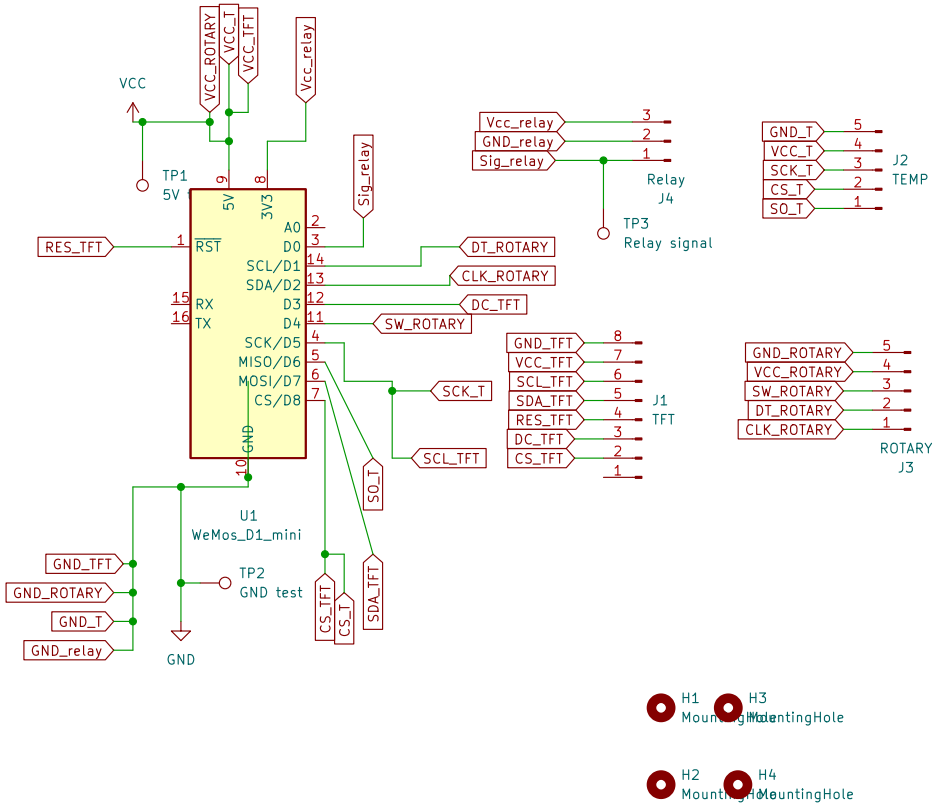

Sheet: /
File: kiln-pcb.kicad_sch

Title: Open Kiln

Size: A4	Date:	**Rev: v1**
KiCad E.D.A. kicad (6.0.2)		Id: 1/1