µTVM
Deep Learning on Bare-Metal Devices

Pratyush Patel

sampl

PAUL G. ALLEN SCHOOL
OF COMPUTER SCIENCE & ENGINEERING

tvm.ai

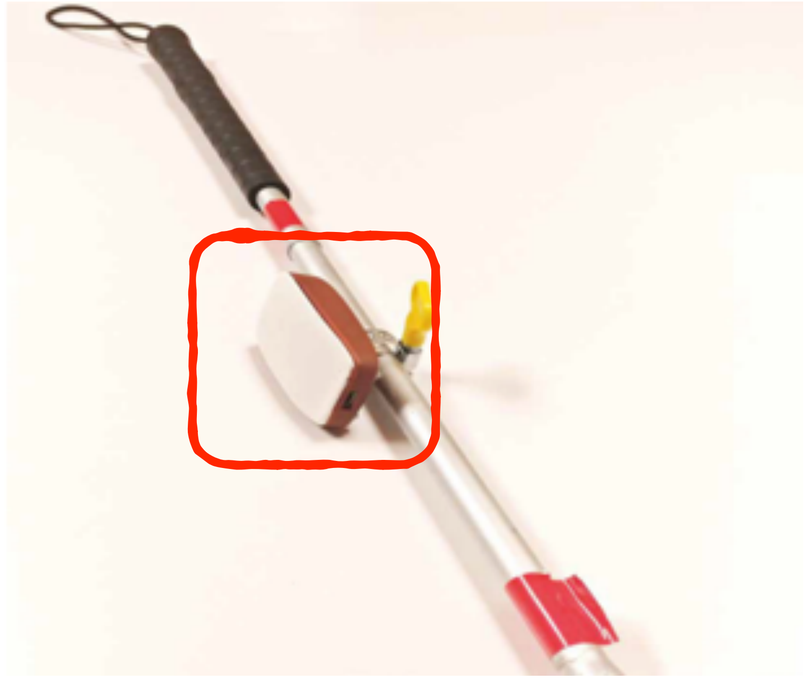

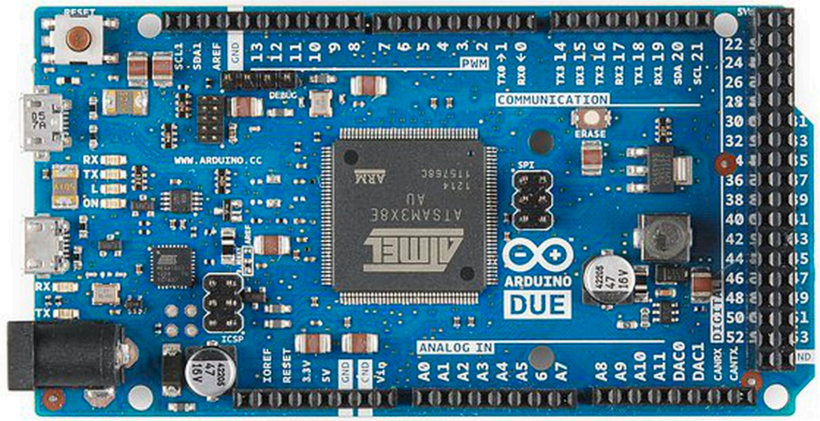
RESET
PWM
COMMUNICATION
ERASE
SPI
WWW.ARDUINO.CC
ATSAM3X8E
ARDUINO
DUE
ANALOG IN
DIGITAL

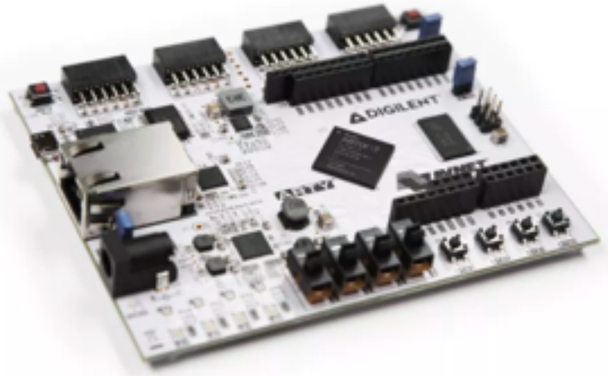
DIGILENT

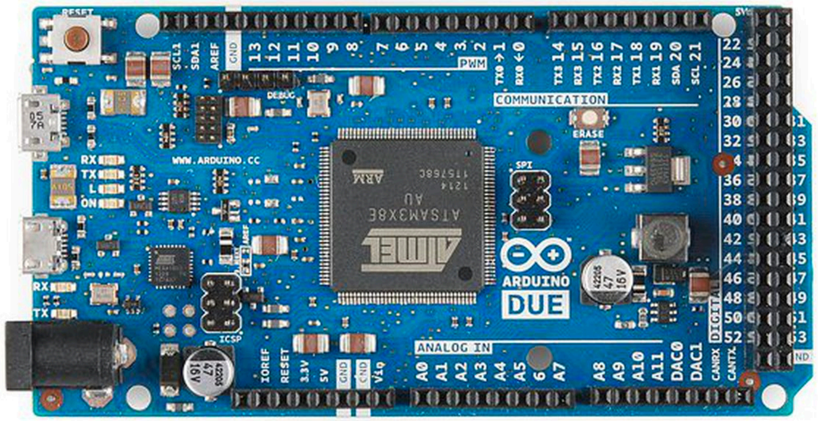
ARDUINO
DUE
WWW.ARDUINO.CC
COMMUNICATION
PWM
ANALOG IN
ATMEL

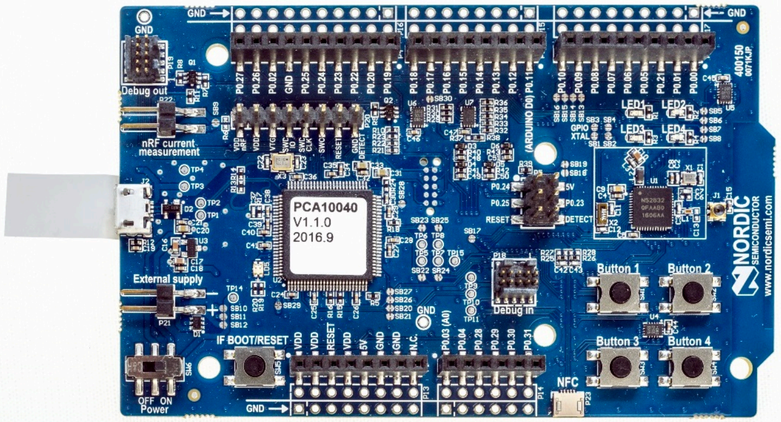
PCA10040
V1.1.0
2016.9
NORDIC SEMICONDUCTOR
www.nordicsemi.com
Debug out
nRF current measurement
External supply
IF BOOT/RESET
OFF ON Power
Debug in
NFC
Button 1
Button 2
Button 3
Button 4
LED1
LED2
LED3
LED4

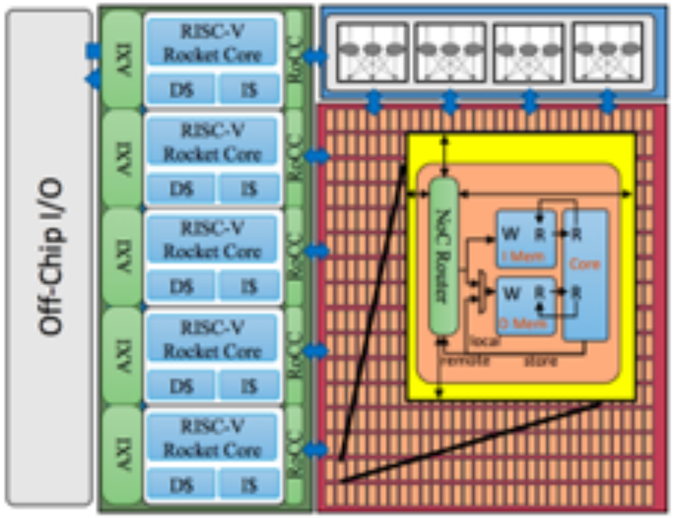
Off-Chip I/O
AXI
RISC-V Rocket Core
D$
I$
NoC Router
I Mem
D Mem
Core
local
remote
store

No OS stack

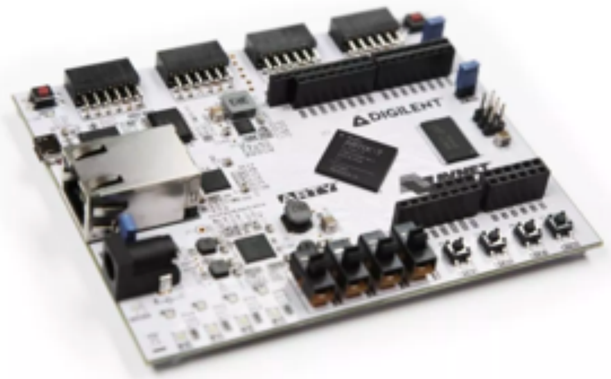

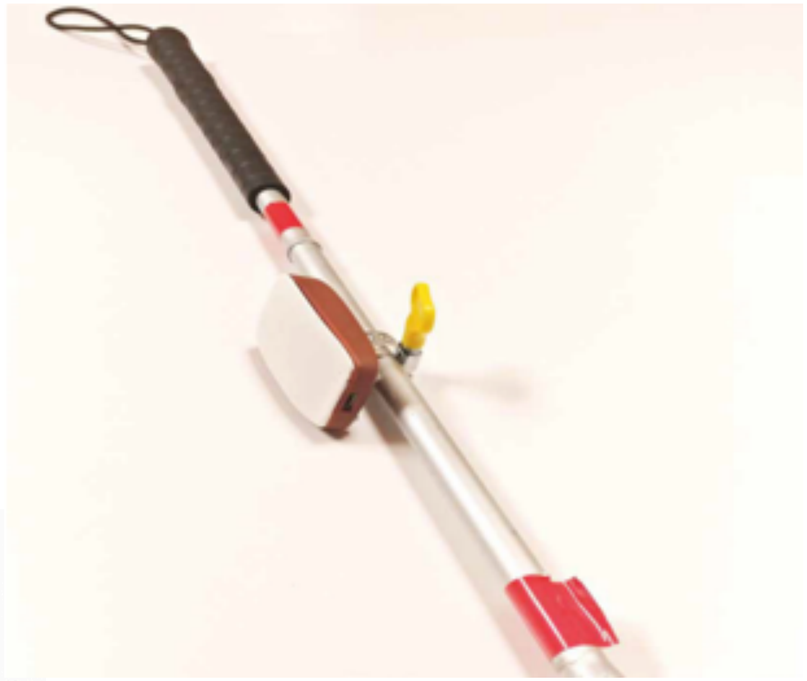

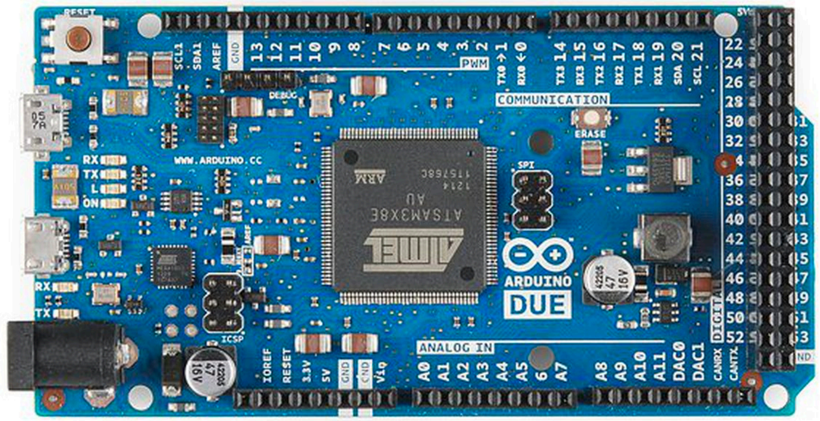
COMMUNICATION
ANALOG IN
ARDUINO
DUE

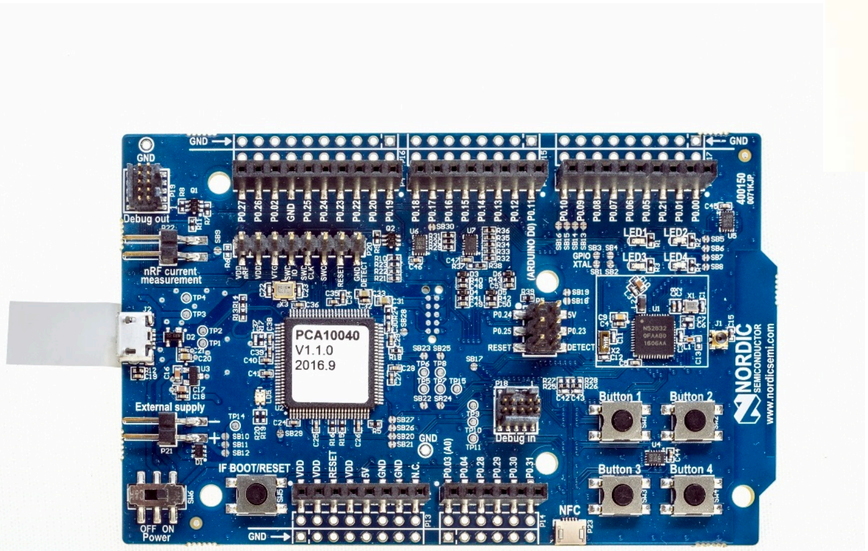
PCA10040
V1.1.0
2016.9
Button 1
Button 2
Button 3
Button 4
NORDIC
SEMICONDUCTOR

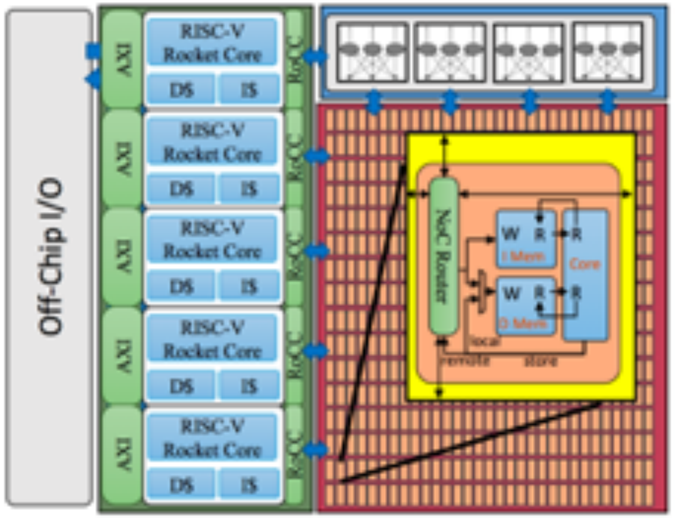
Off-Chip I/O
AXI
RISC-V
Rocket Core
DS
IS
RoCC
NoC Router
Core

Extend TVM to support bare-metal devices

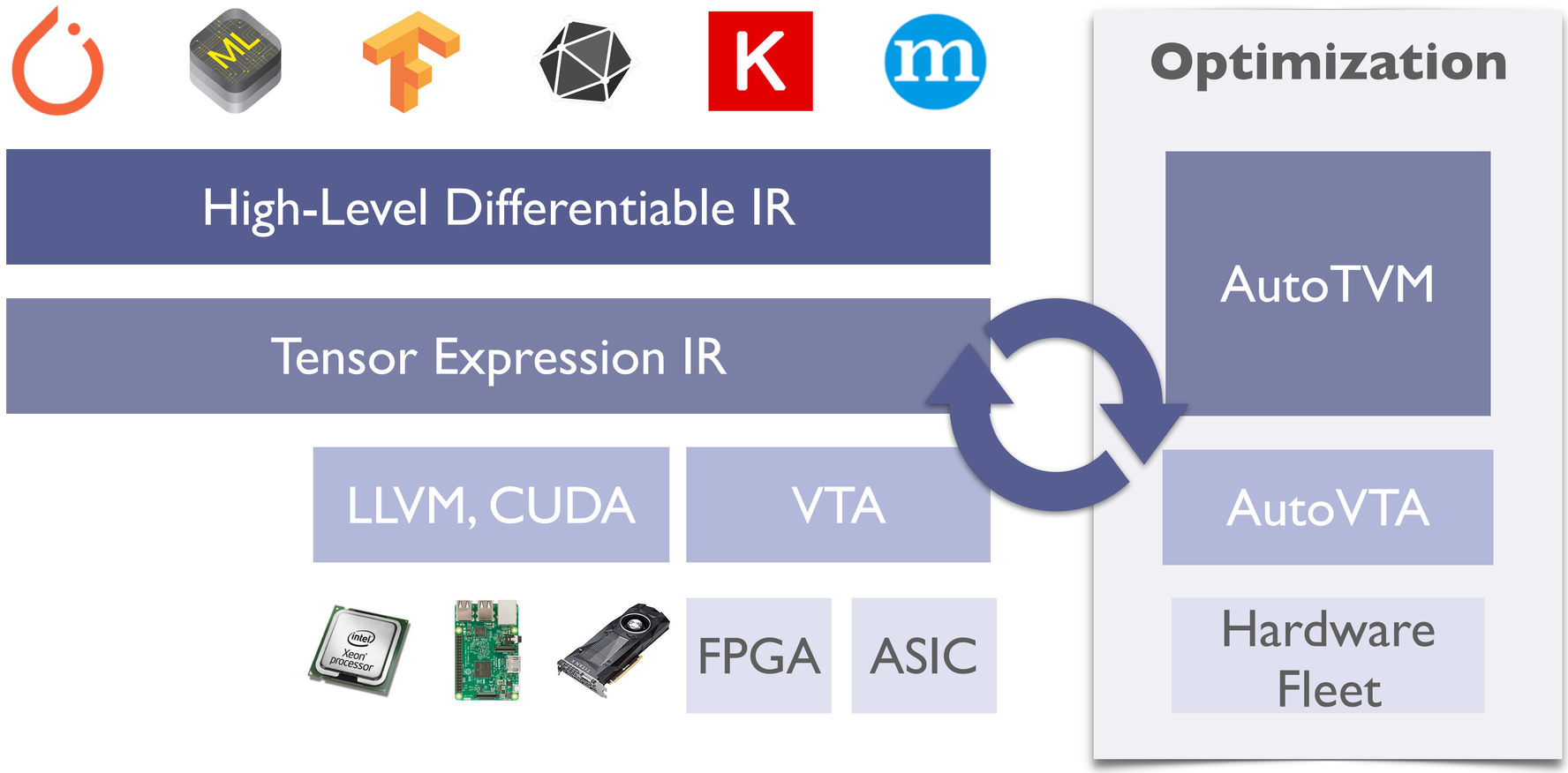

Extend TVM to support bare-metal devices

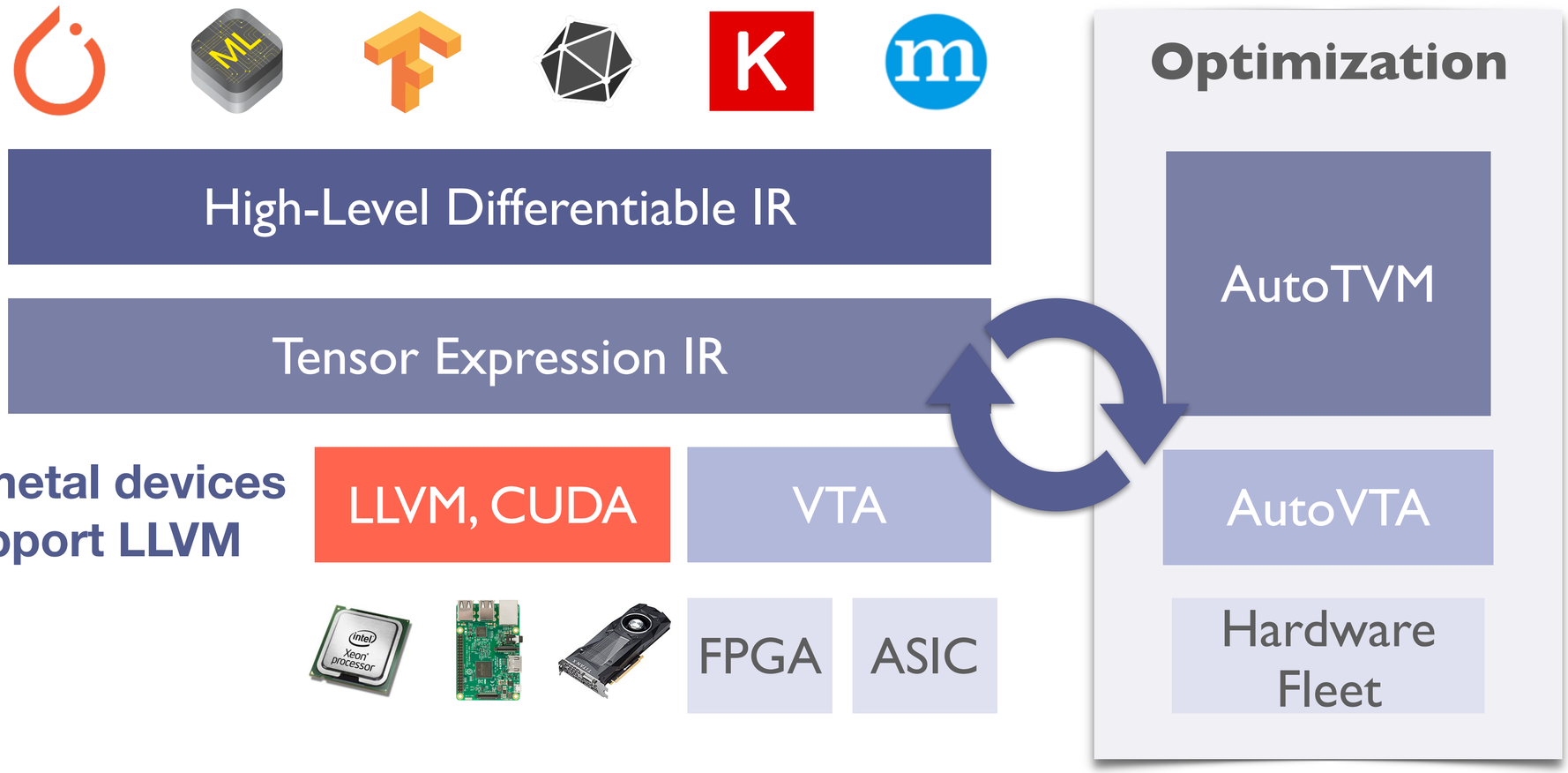

Most bare-metal devices do not support LLVM

Extend TVM to support bare-metal devices

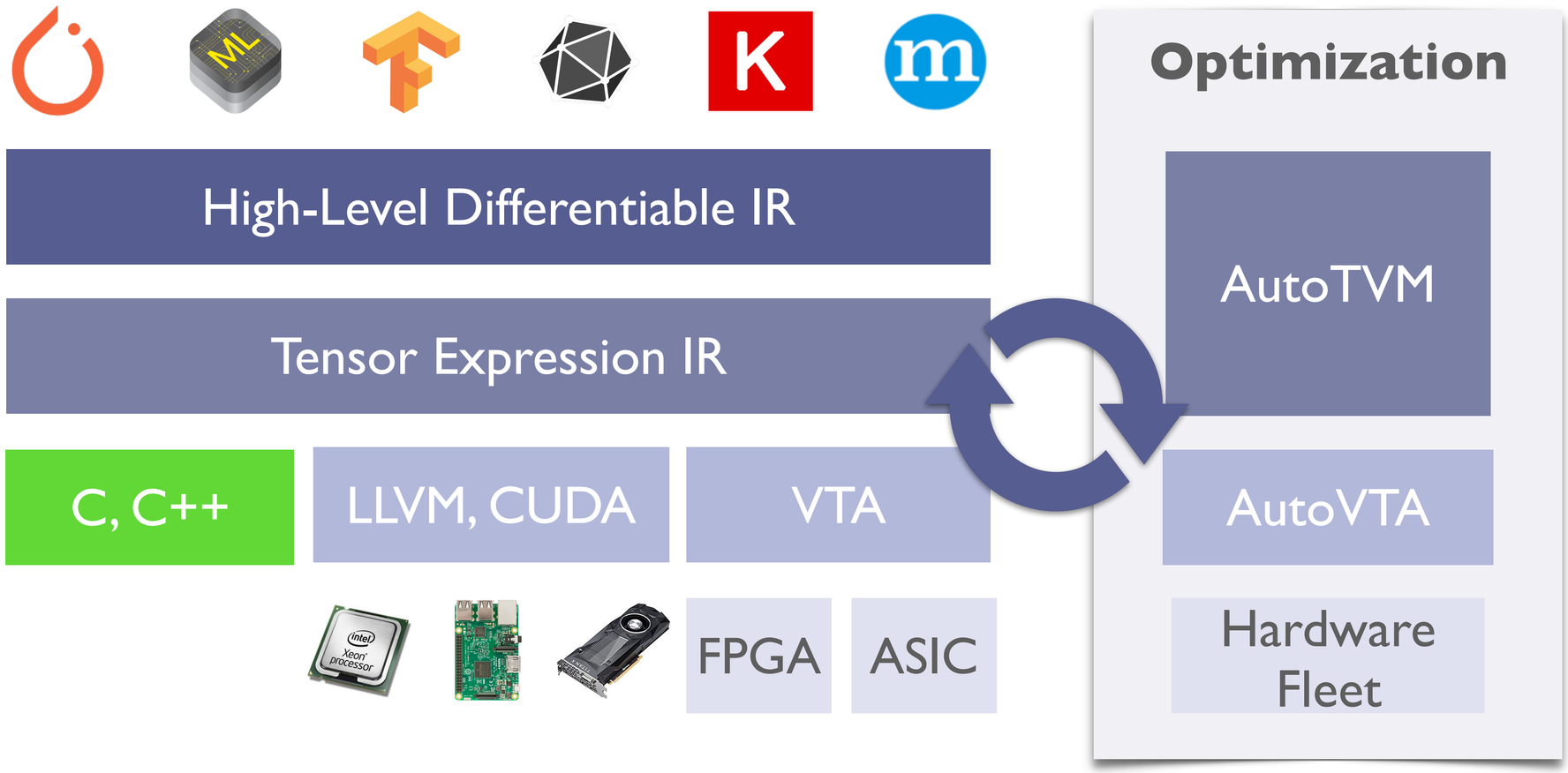

Extend TVM to support bare-metal devices

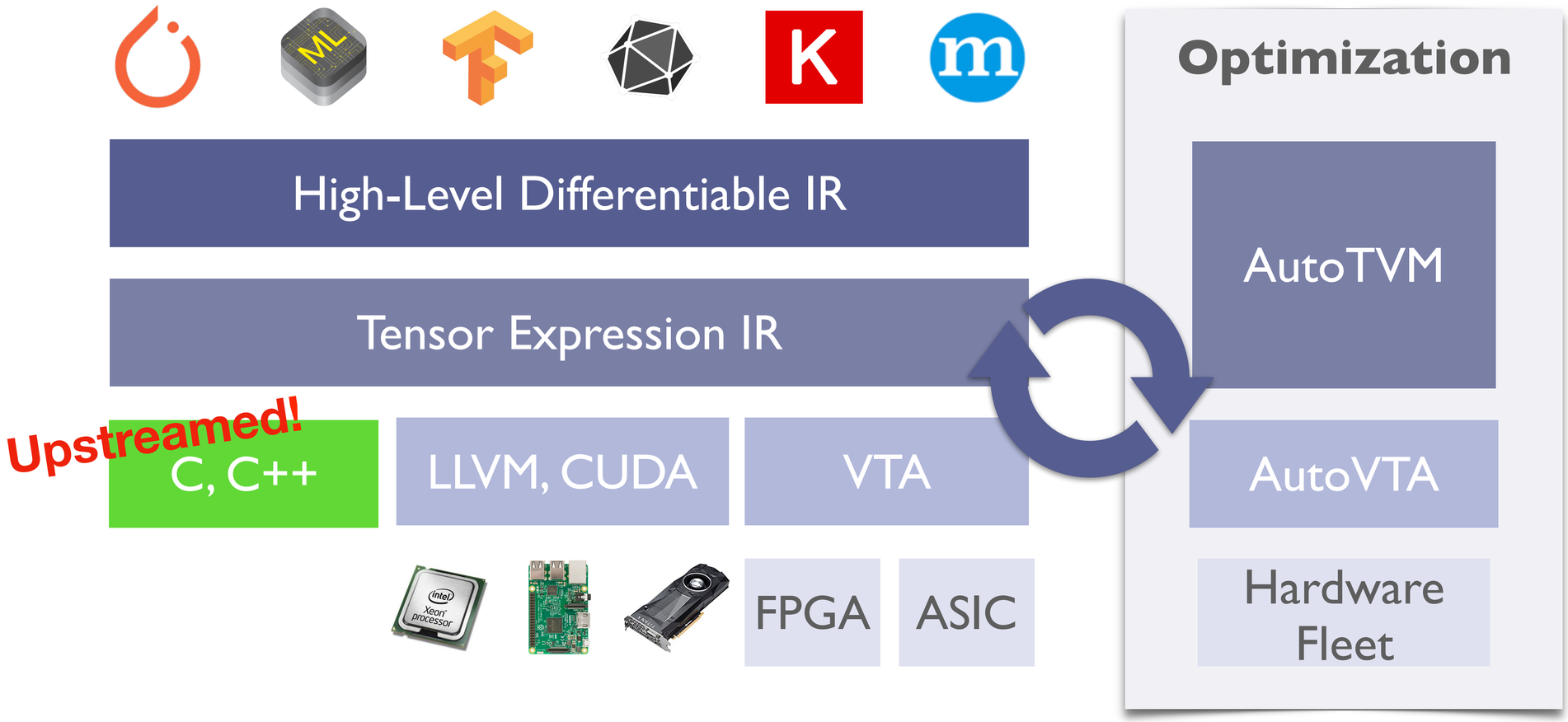

Extend TVM to support bare-metal devices

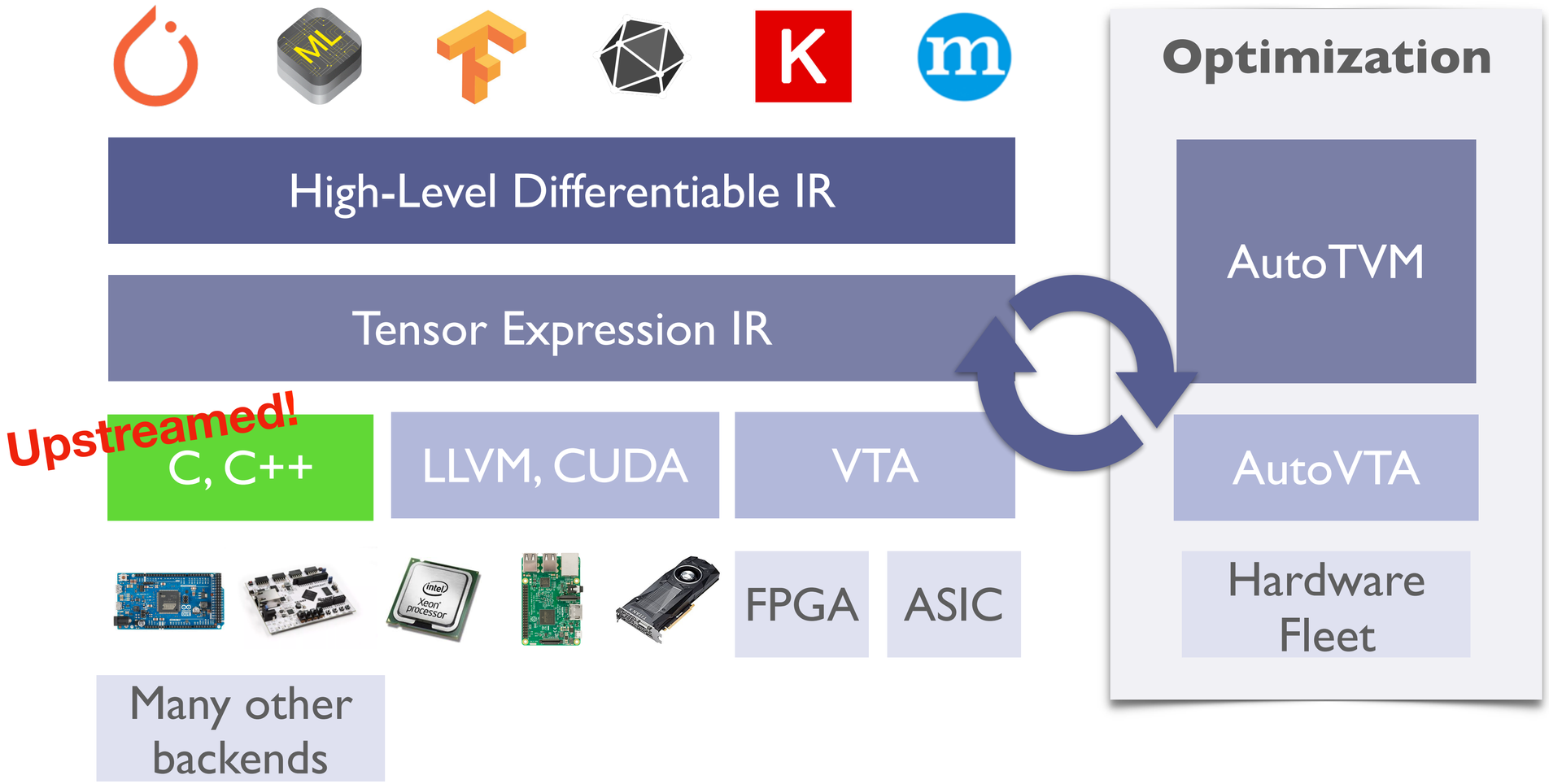

µTVM builds upon AutoTVM

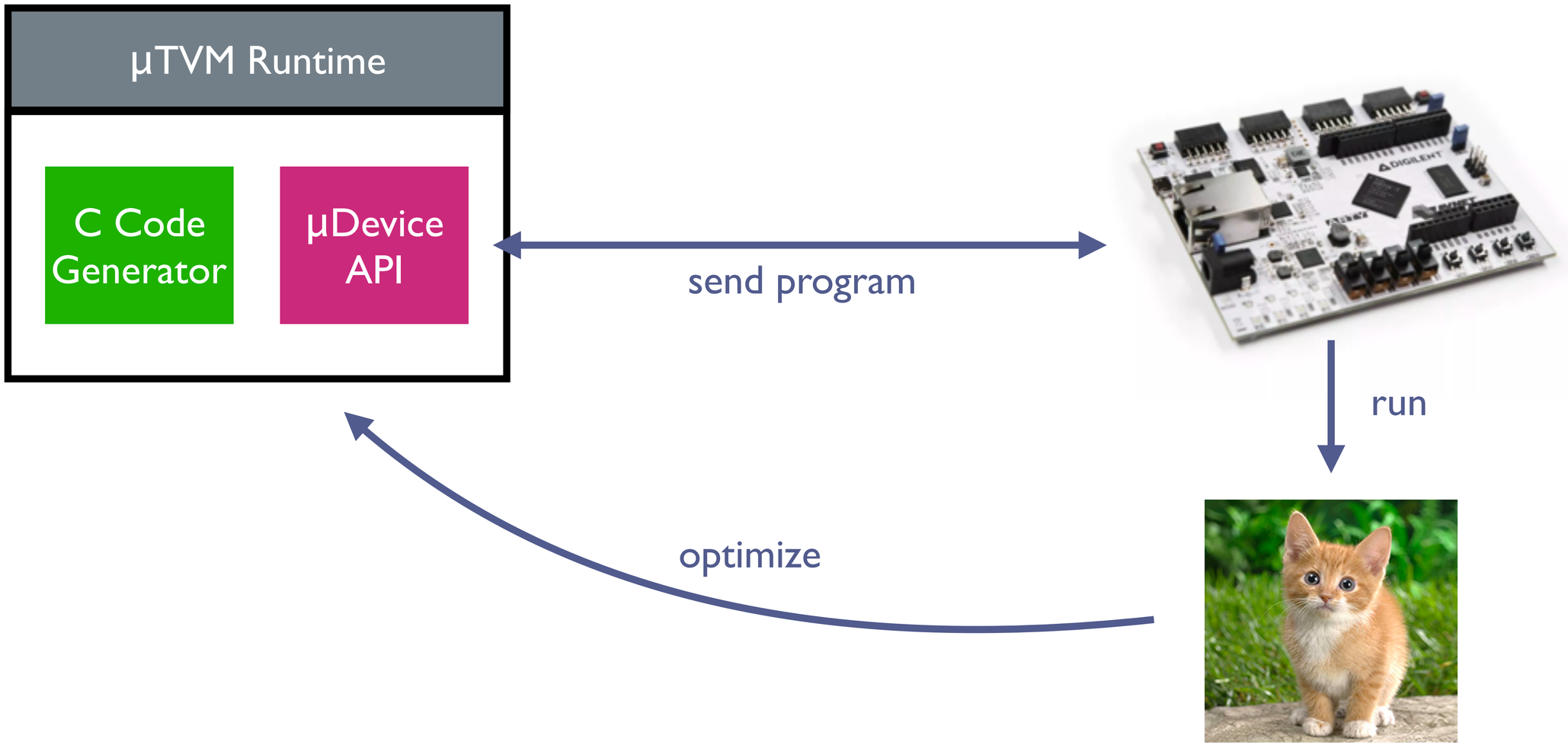

A closer look at µTVM

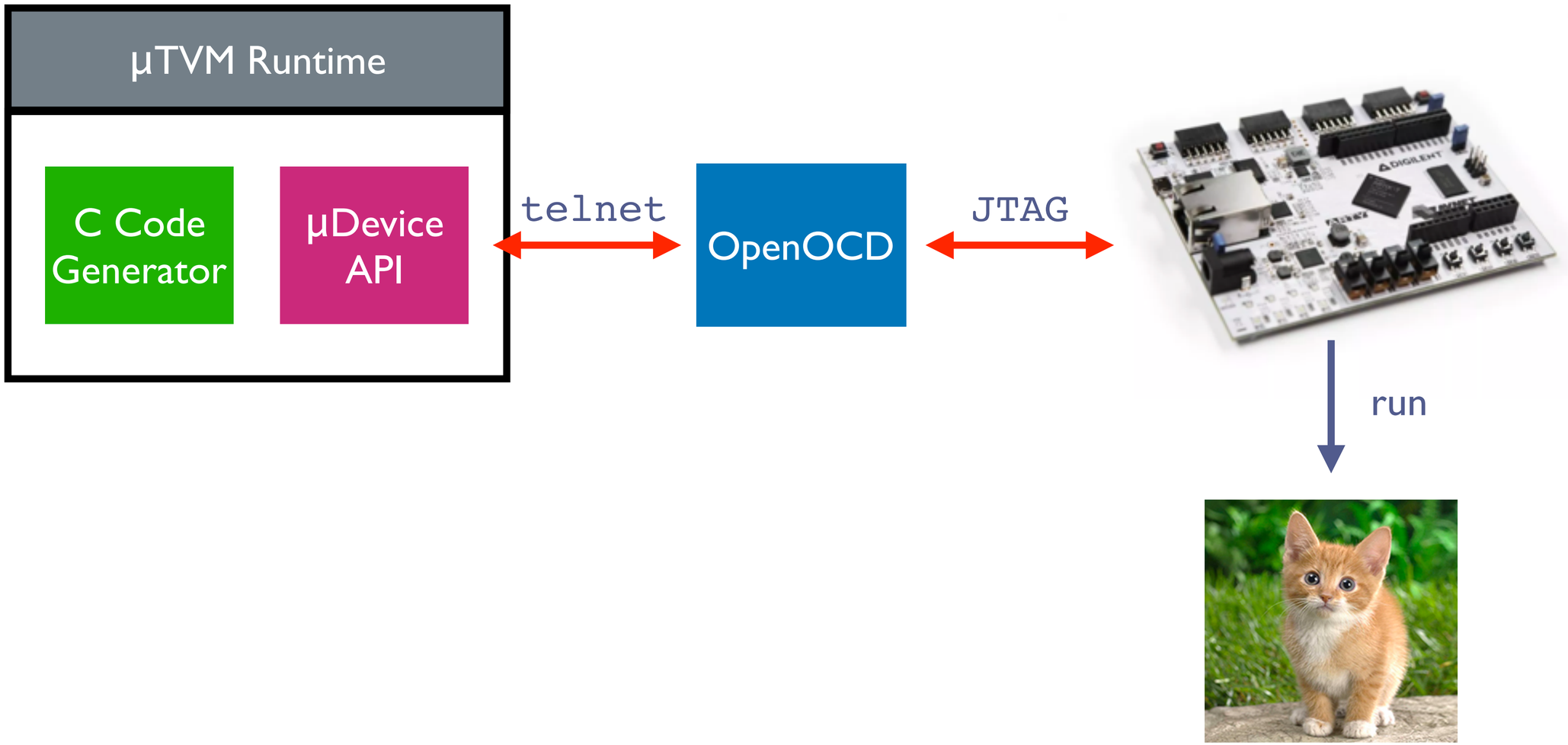

A closer look at µTVM

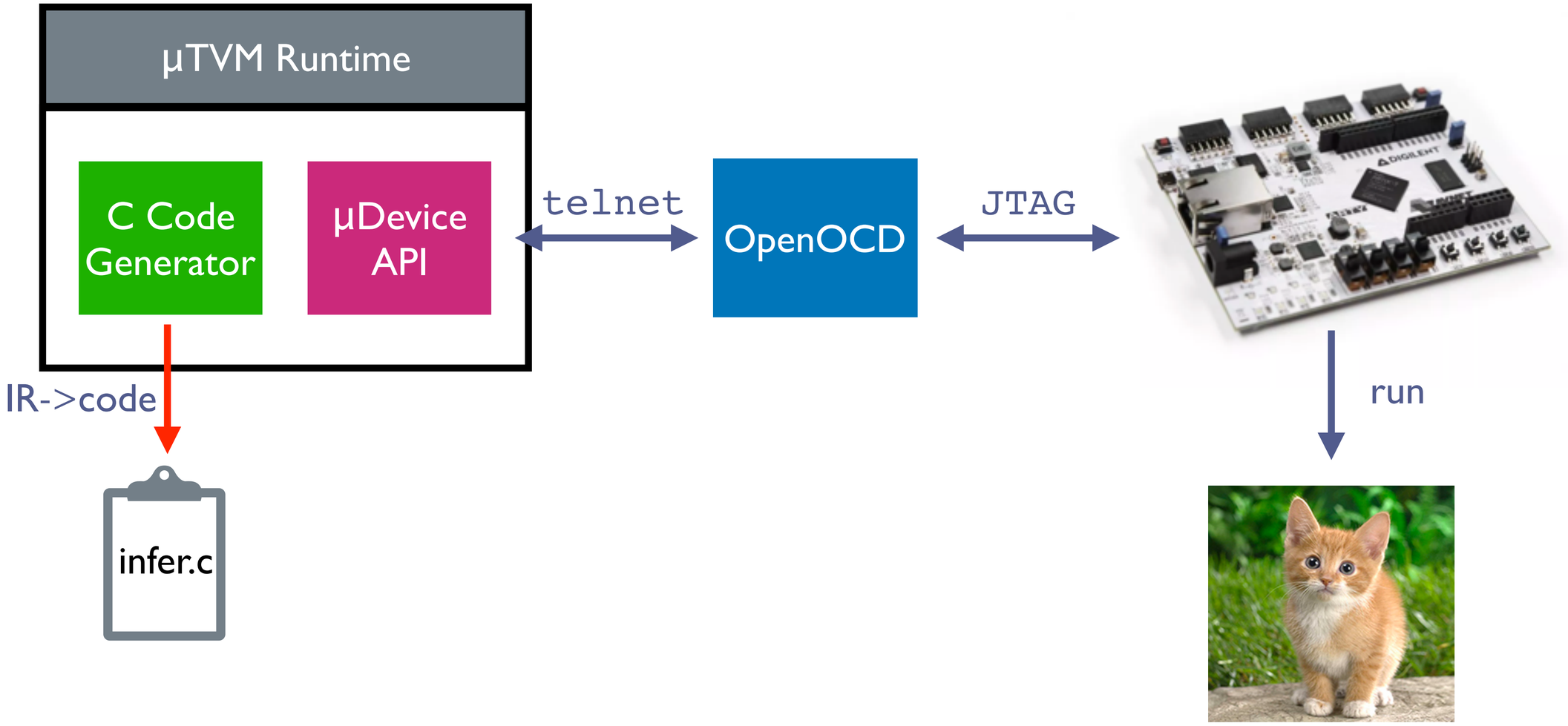

A closer look at µTVM

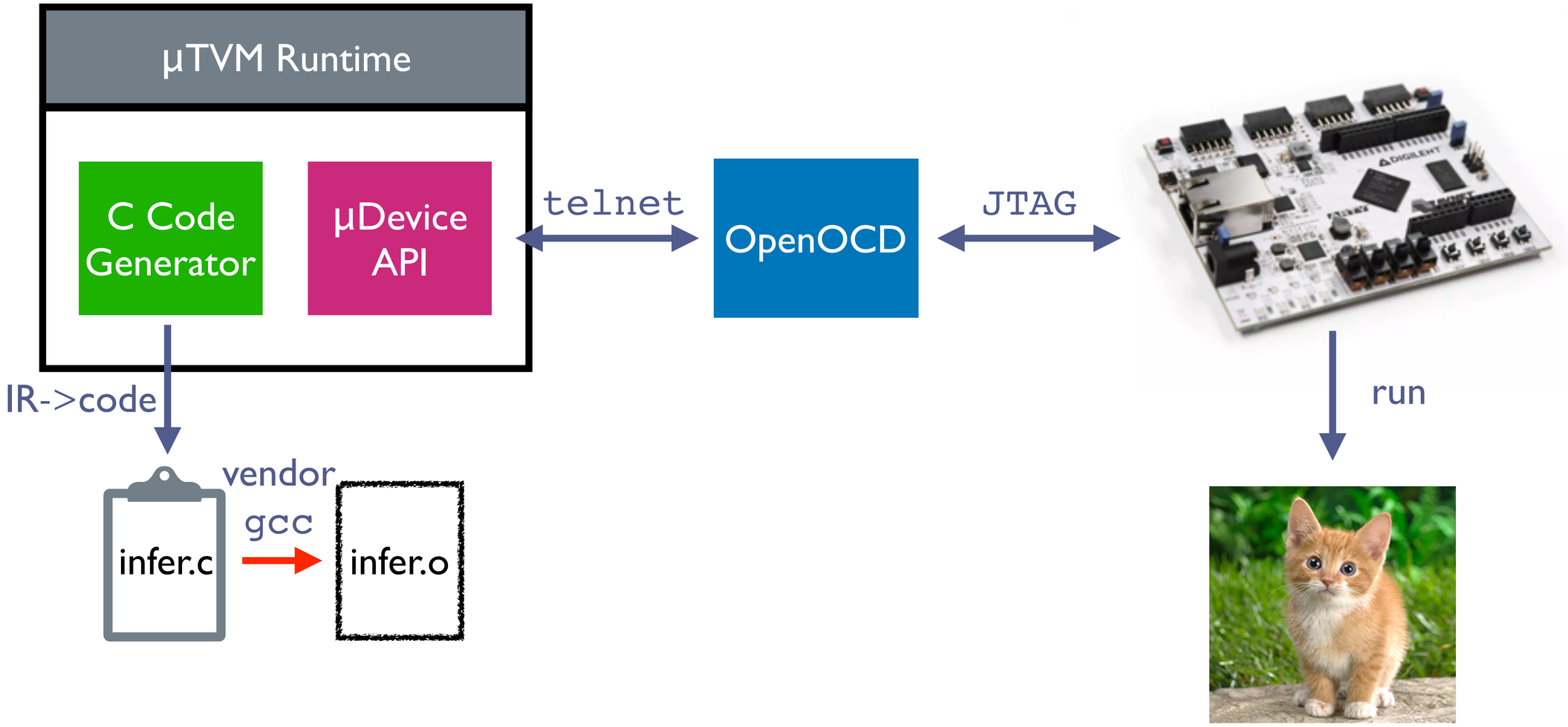

A closer look at µTVM

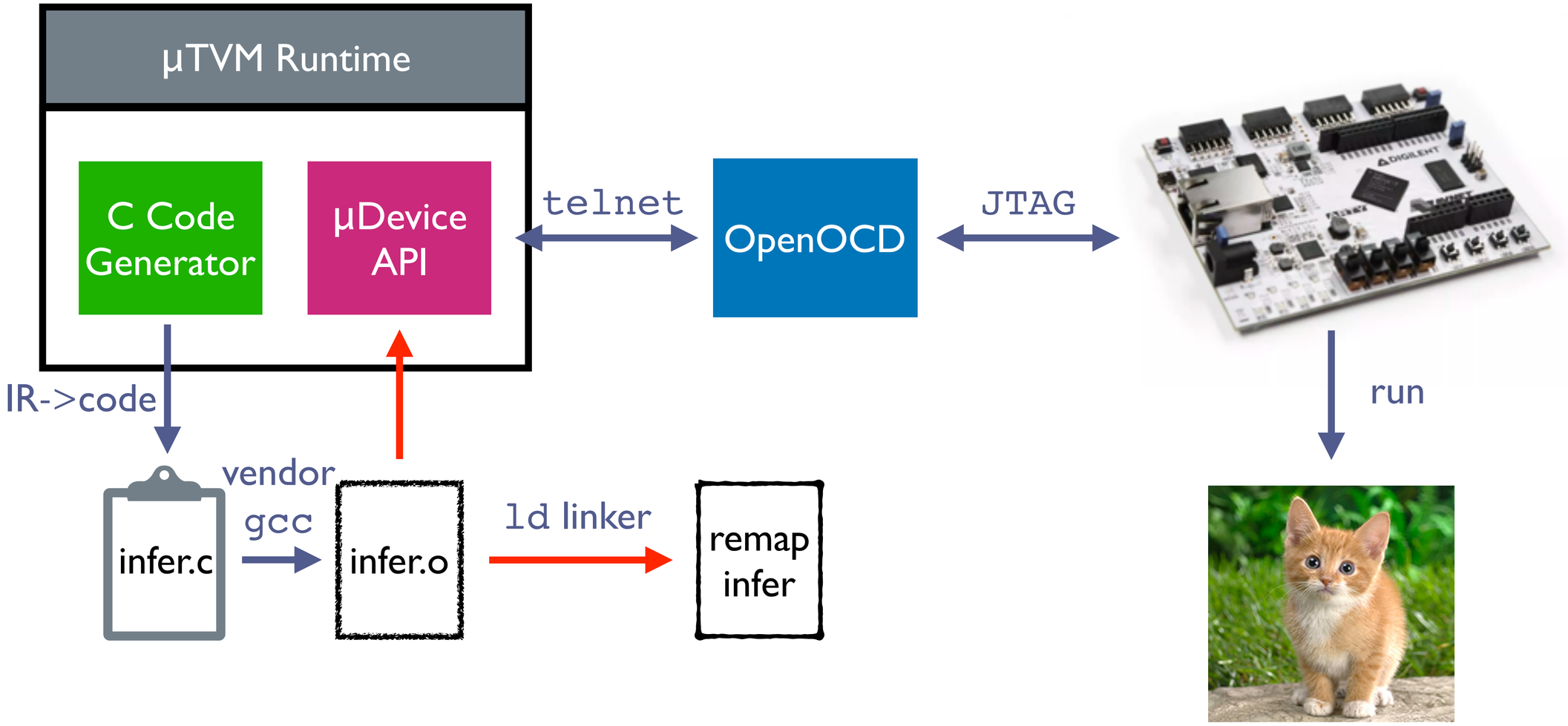

A closer look at µTVM

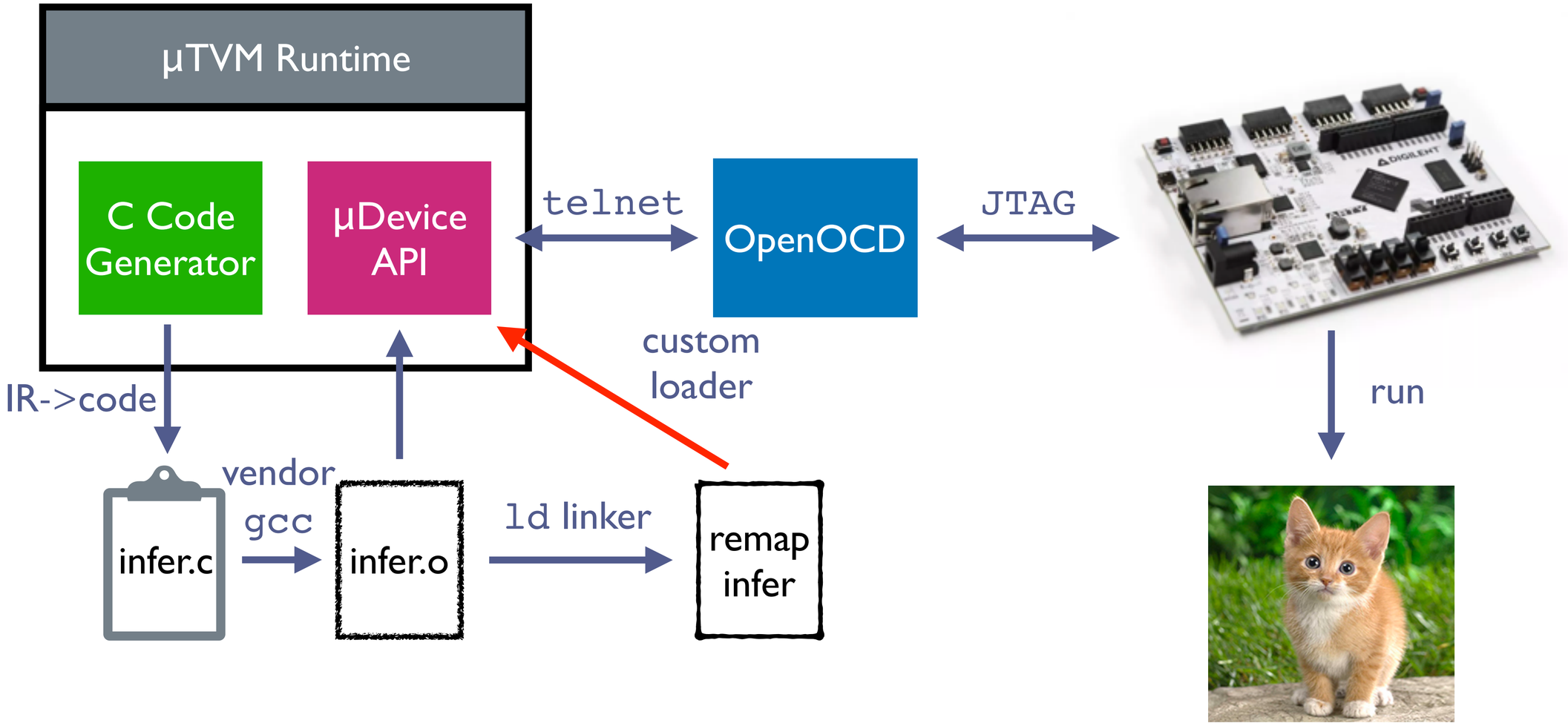

A closer look at µTVM

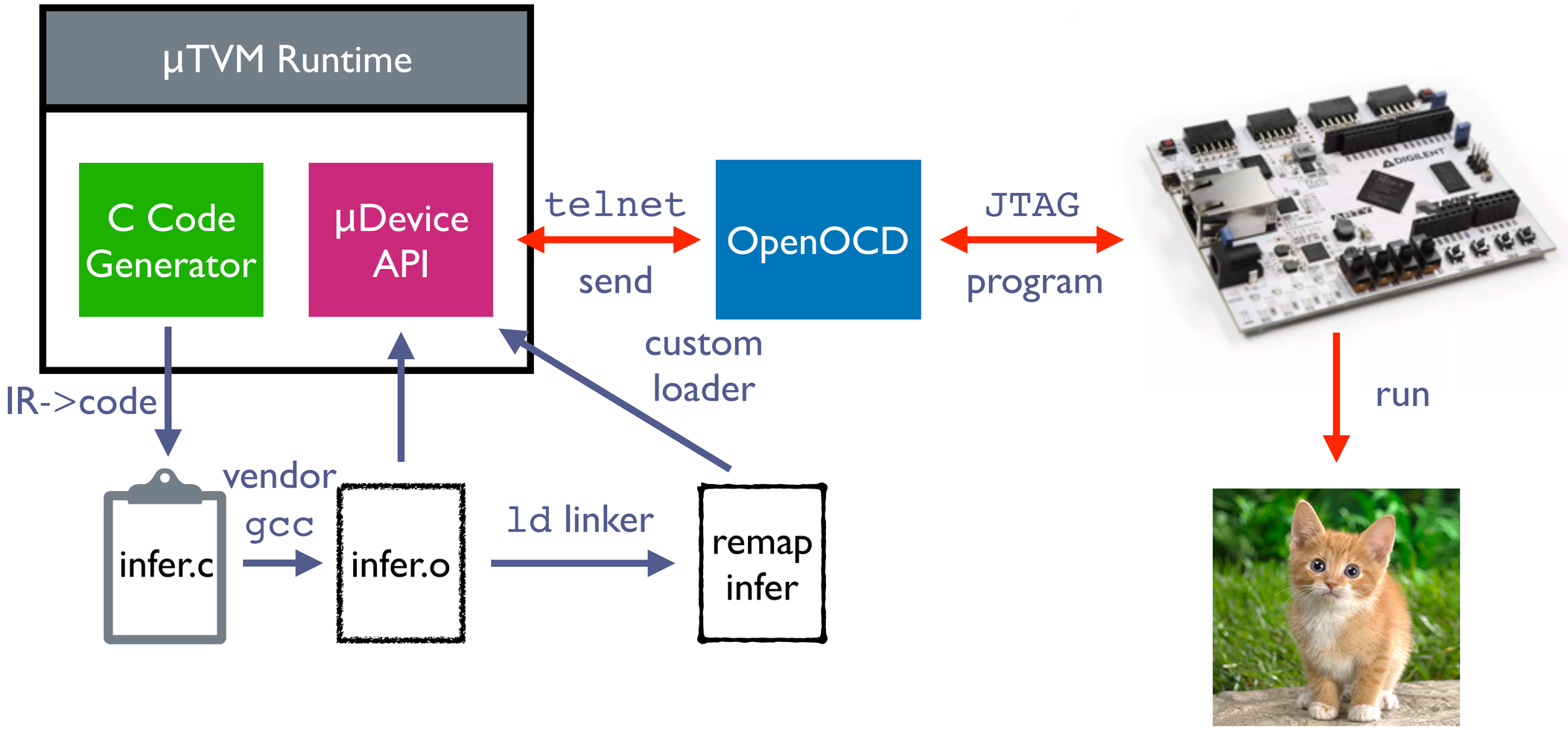

Next steps

- Iron out interfaces with actual hardware.
- Optimize with AutoTVM.
- Support restricted and configurable model sizes.
- Enable custom data types such as fixed-point precision formats.

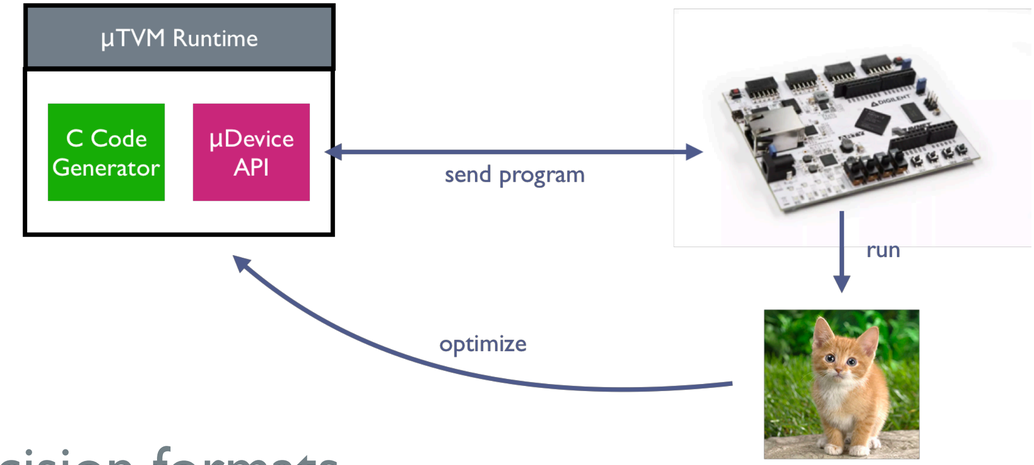

Get in touch!

Pratyush Patel — patelp1@cs.uw.edu