Wiring

Maryam is an electrical engineer. She is designing wiring on a communication tower. On the tower there are some connection points, placed at distinct heights. A wire can be used to connect any two connection points. Each connection point can be connected to an arbitrary number of wires. There are two types of connection points: red and blue.

For the purpose of this problem the tower should be viewed as a line and the connection points as blue and red points that are at non-negative integer coordinates on this line. The length of a wire is the distance between the two connection points it connects.

Your goal is to help Maryam find a wiring scheme such that:

1. Each connection point has at least one wire to a connection point of a different color.
2. The total length of the wires is minimized.

Implementation details

You should implement the following procedure:

```
int64 min_total_length(int[] r, int[] b)
```

- r: array of length n containing the positions of the red connection points in increasing order.
- b: array of length m containing the positions of the blue connection points in increasing order.
- This procedure should return the minimum total length of wires, among all valid wiring schemes.
- Note that the return type of this procedure is `int64`.

Example

```
min_total_length([1, 2, 3, 7], [0, 4, 5, 9, 10])
```

The figure below illustrates this example.

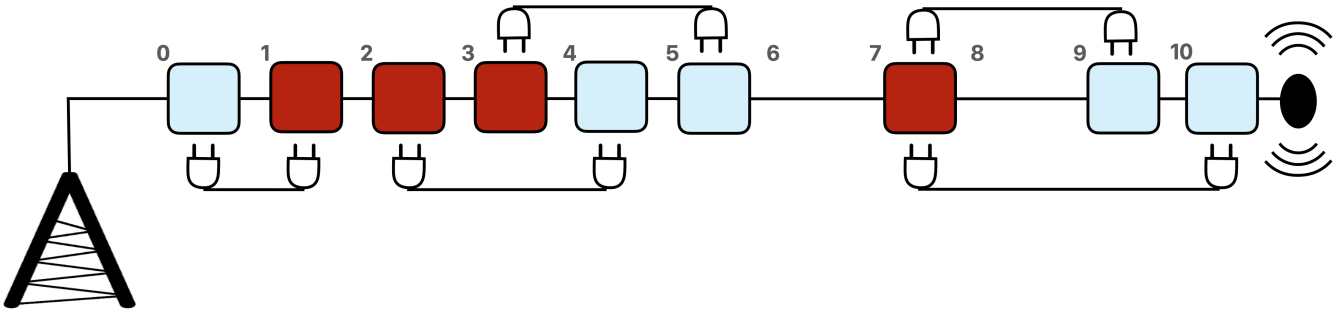

- The tower is shown horizontally.
- In the black-and-white printed version of the problem statement the red connection points are dark and the blue ones are light.
- There are 4 red connection points, located at positions $1, 2, 3,$ and 7.

- There are 5 blue connection points, located at positions $0, 4, 5, 9,$ and 10.
- One optimal solution is shown in the figure above.
- In this solution, the total length of the wires is $1 + 2 + 2 + 2 + 3 = 10$, which is optimal. So, the procedure should return 10.
- Note that two wires are connected to the connection point at position 7.

Constraints

- $1 \leq n, m \leq 100,000$,
- $0 \leq r[i] \leq 10^9$ (for all $0 \leq i \leq n-1$),
- $0 \leq b[i] \leq 10^9$ (for all $0 \leq i \leq m-1$),
- Each of the arrays r and b is sorted in ascending order.
- All $n + m$ values in the arrays r and b are distinct.

Subtasks

1. (7 points) $n, m \leq 200$,
2. (13 points) All red connection points have positions smaller than any blue connection points.
3. (10 points) There is at least one red connection point and one blue connection point among every 7 consecutive connection points.
4. (25 points) All connection points have different positions in the range $[1, n+m]$.
5. (45 points) No additional constraints.

Sample grader

The sample grader reads the input in the following format:

- line 1: $n \;\; m$
- line 2: $r[0] \;\; r[1] \;\; \ldots \;\; r[n-1]$
- line 3: $b[0] \;\; b[1] \;\; \ldots \;\; b[m-1]$

The sample grader prints a single line containing the return value of `min_total_length`.