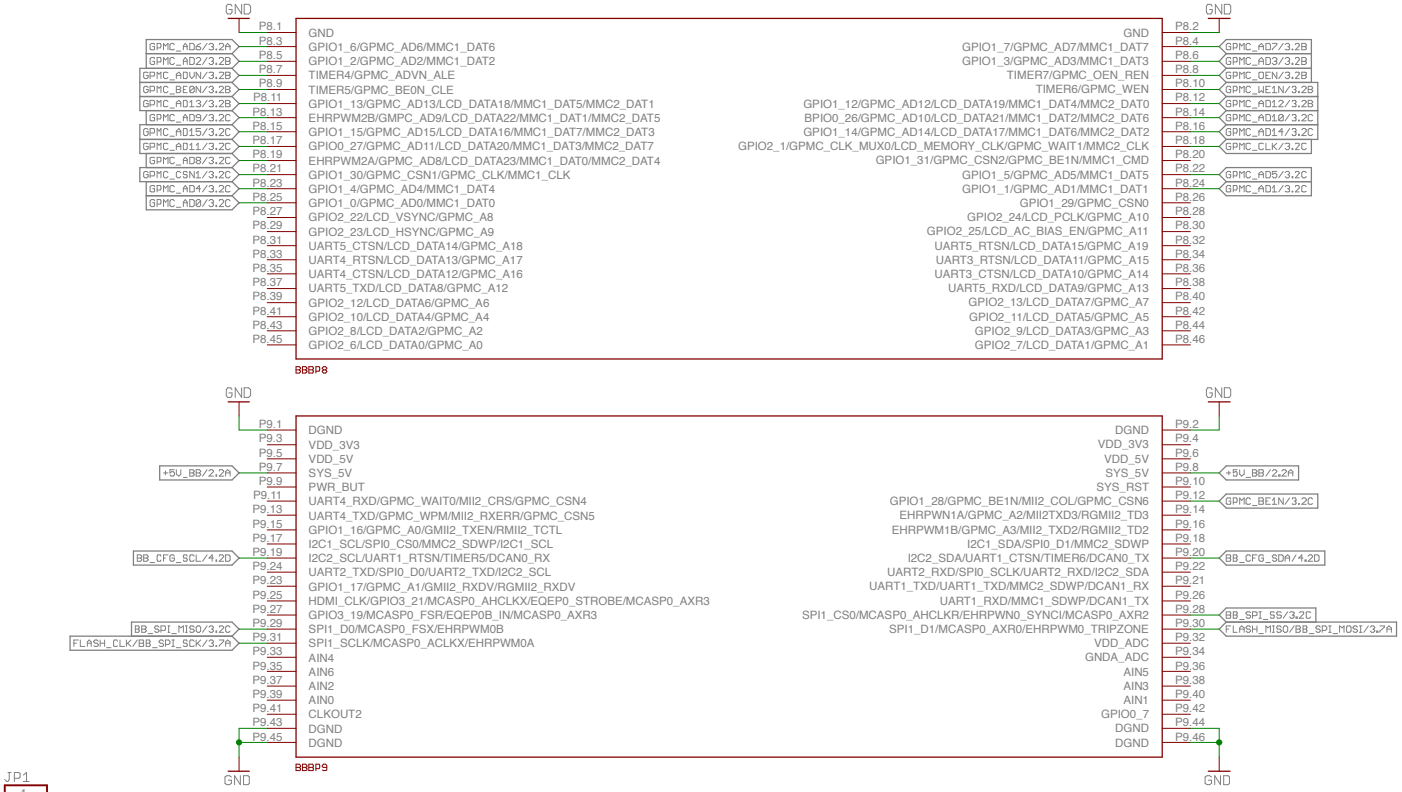

led-matrix-cape	
09.06.15 18:04	
Sheet: 1/5	

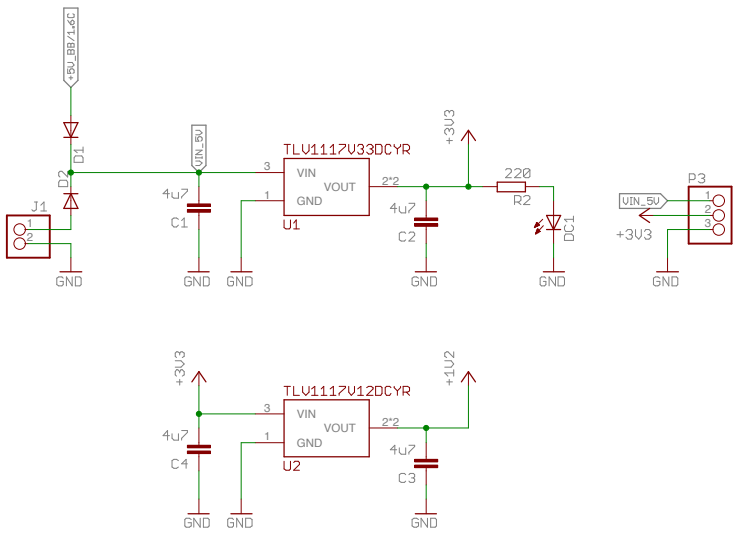

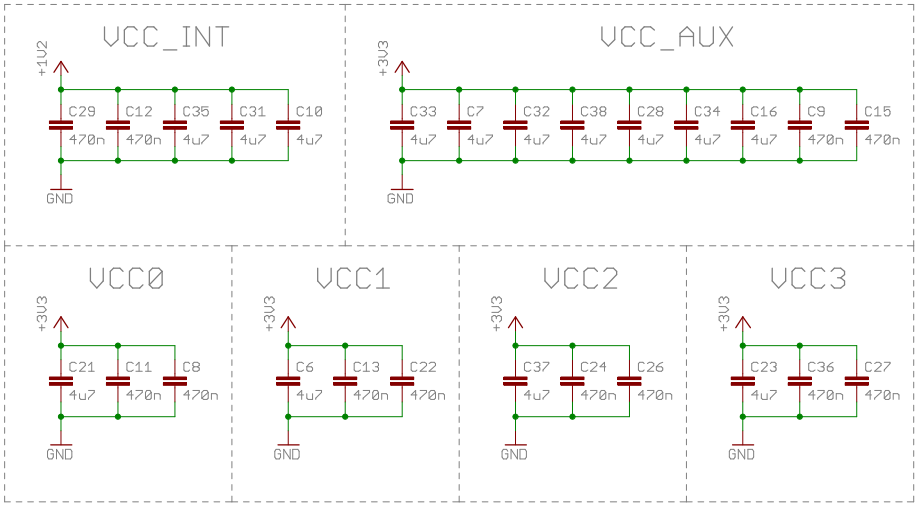

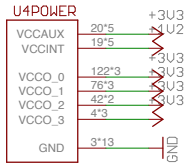

	led-matrix-cape
	09.06.15 18:04
	Sheet: 2/5

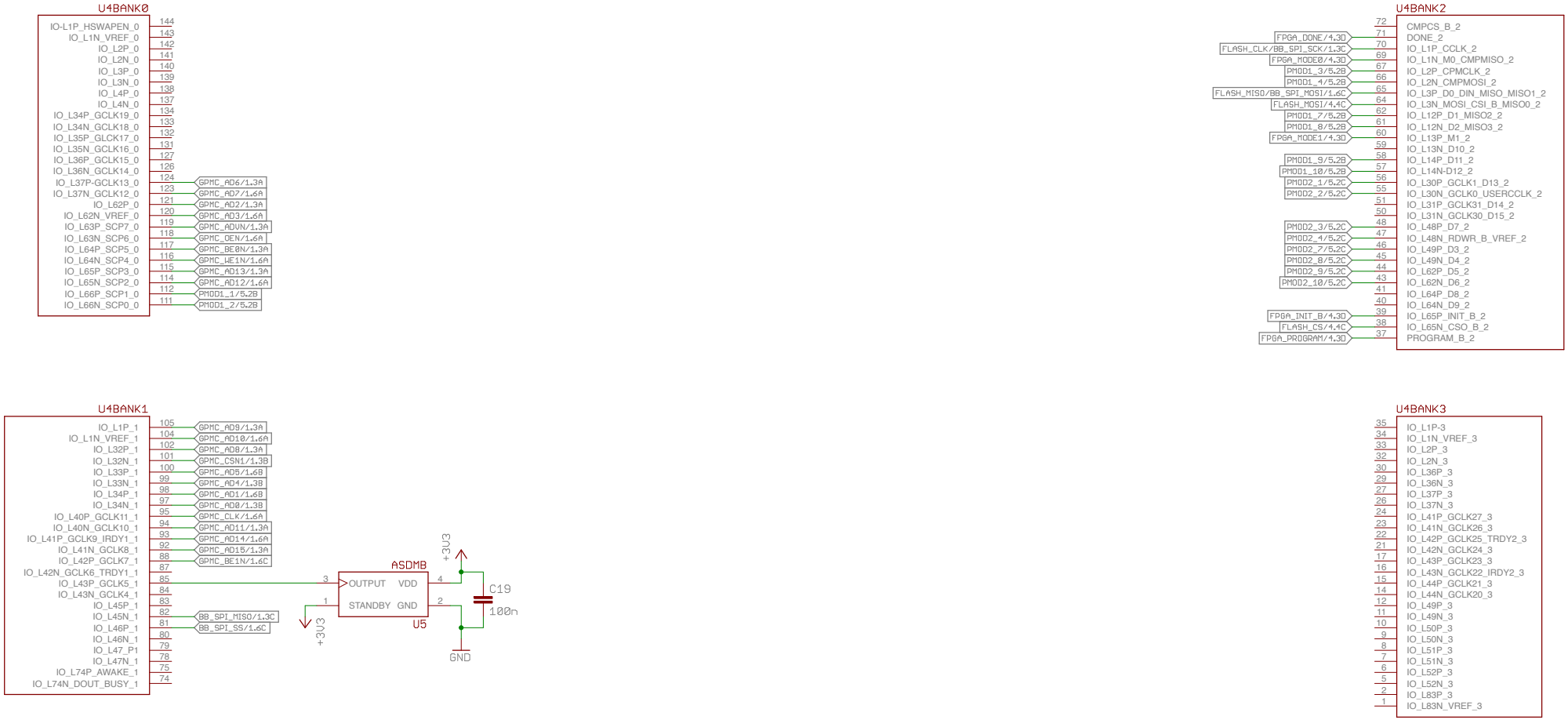

led-matrix-cape

09.06.15 18:04

Sheet: 3/5

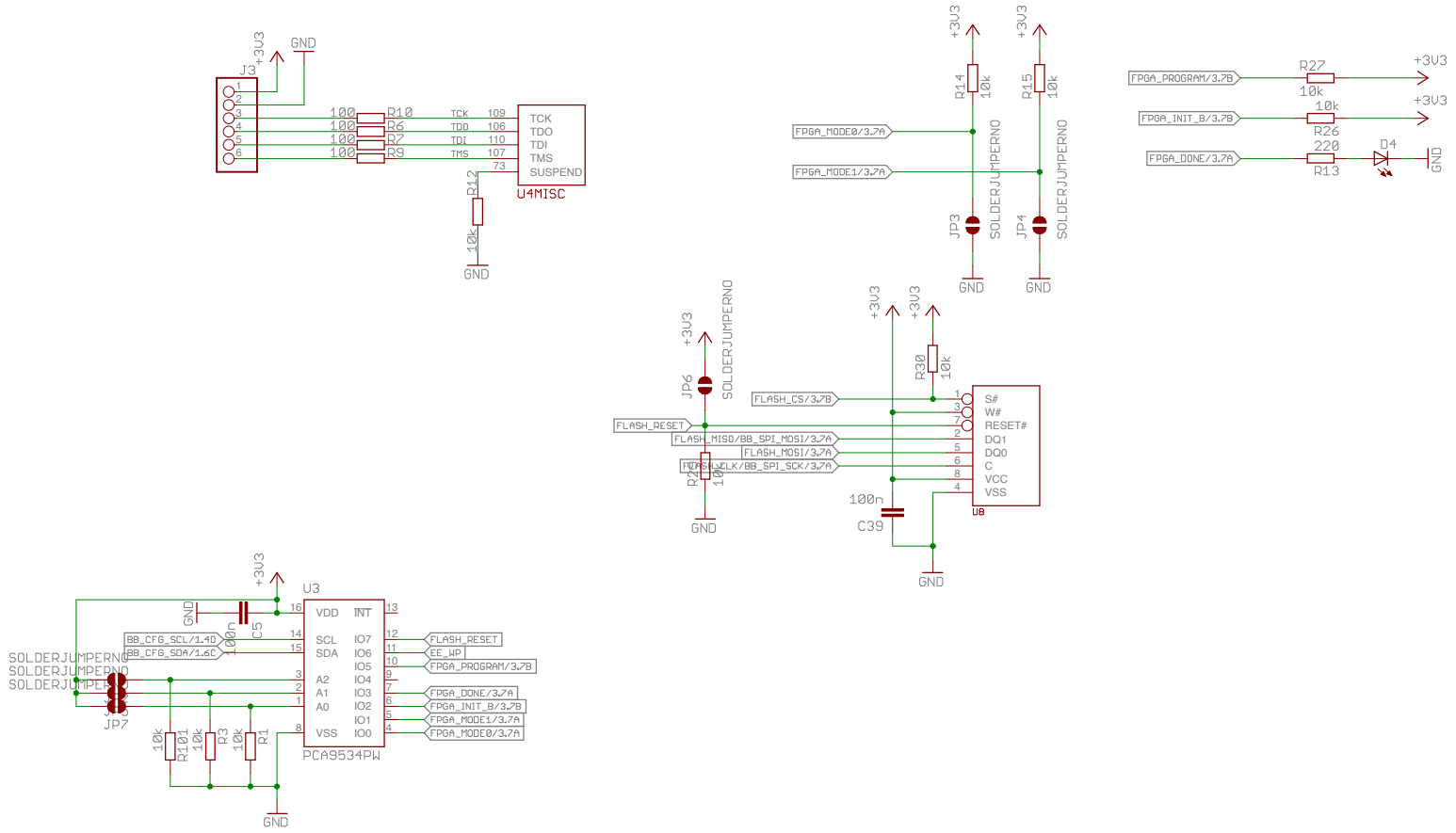

led-matrix-cape

09.06.15 18:04

Sheet: 4/5

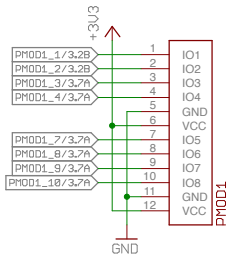

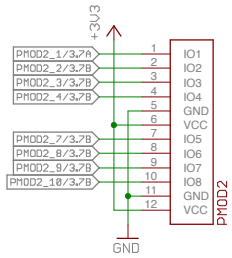

	led-matrix-cape
	09.06.15 18:04
	Sheet: 5/5