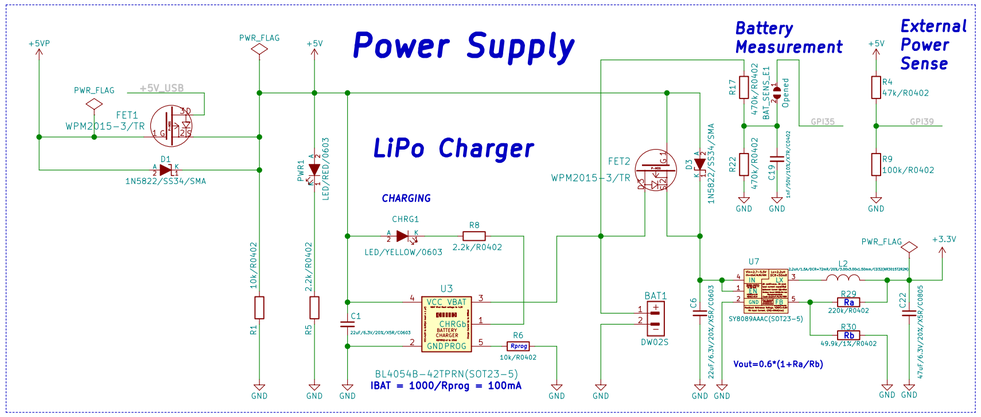

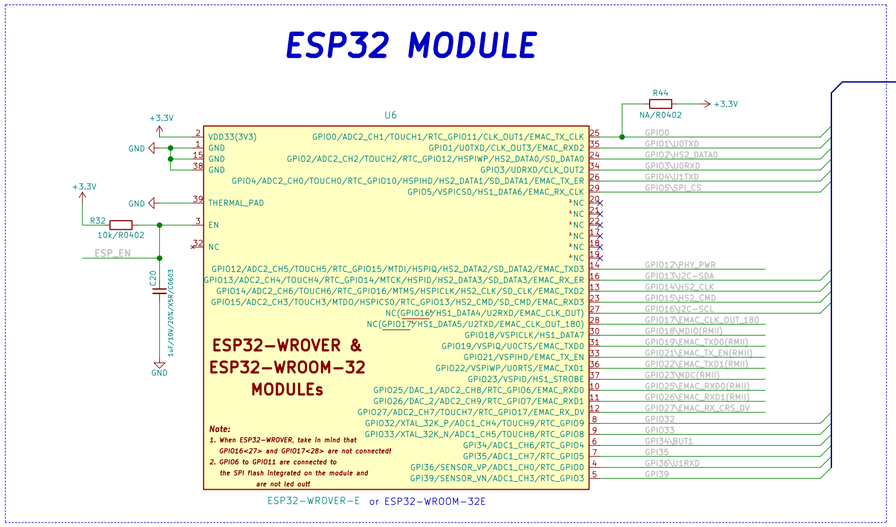

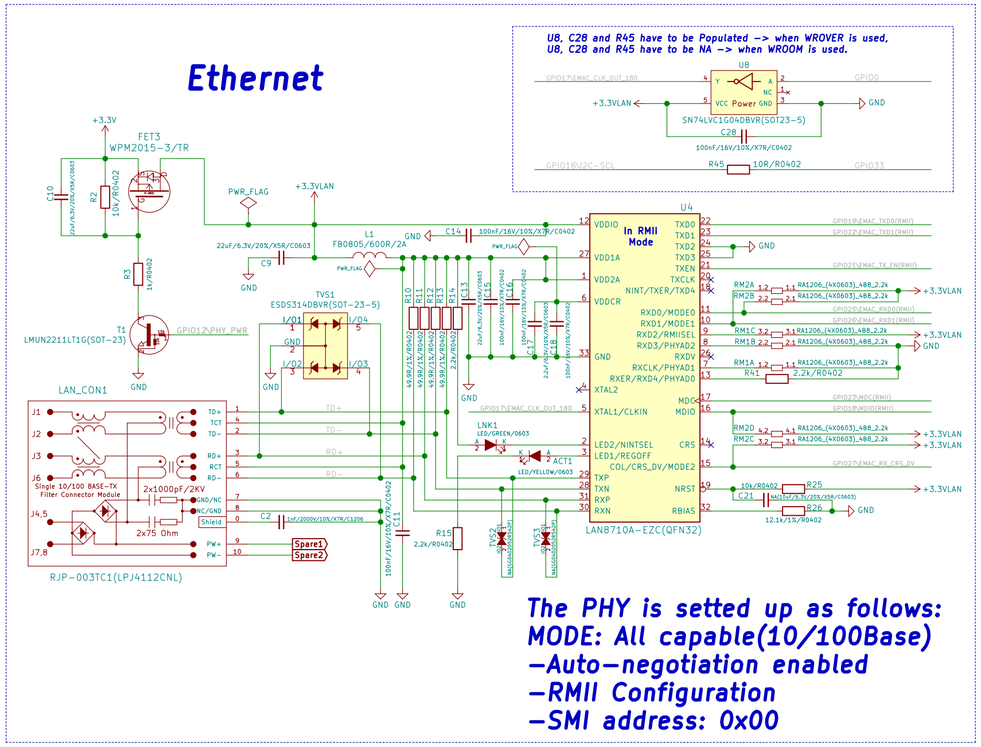

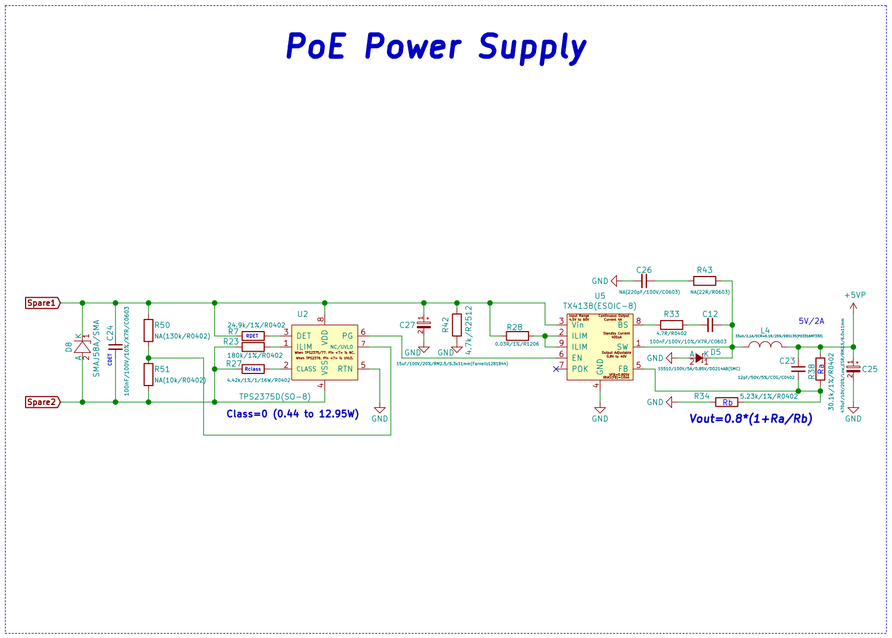

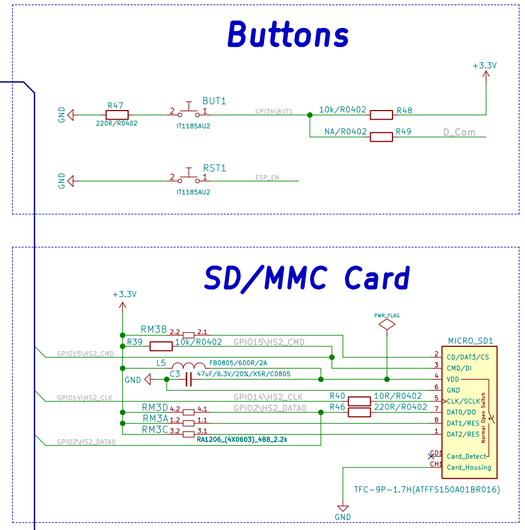

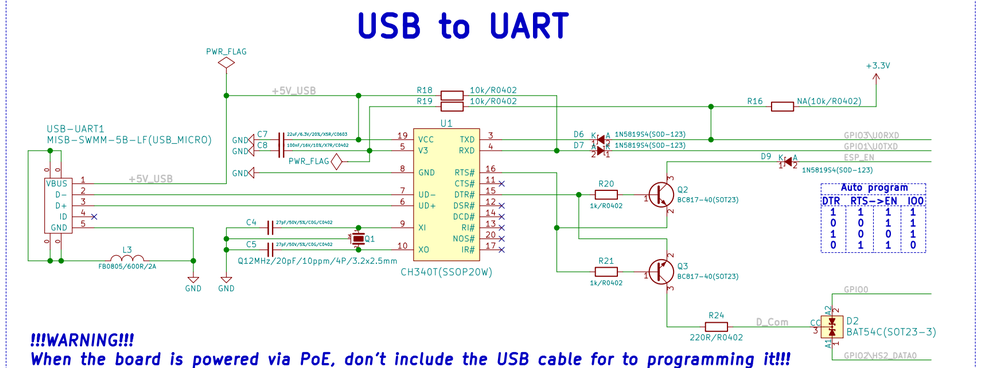

Notes:

Software Selectable Pins

Interface	Signal	Pin
EMAC	EMAC_MDC_out EMAC_MDI_In EMAC_MDO_out EMAC_CRS_out EMAC_COL_out	Any GPIO
I2C	I2CEXT0_SCL_In I2CEXT0_SDA_In I2CEXT1_SCL_In I2CEXT1_SDA_In I2CEXT0_SCL_out I2CEXT0_SDA_out I2CEXT1_SCL_out I2CEXT1_SDA_out	Any GPIO
General Purpose SPI	HSPIQ_In/_out HSPID_In/_out HSPICLK_In/_out HSPI_CS0_In/_out HSPI_CS1_out HSPI_CS2_out VSPIQ_In/_out VSPID_In/_out VSPICLK_In/_out VSPI_CS0_In/_out VSPI_CS1_out VSPI_CS2_out	Any GPIO

For more information refer to esp_wroom_32_datasheet_en.pdf.

Internal Bootstrapping Resistors

MTDI/GPIO12:	Pull-Down
GPIO0:	Pull-Up
GPIO2:	Pull-Down
GPIO4:	Pull-Down
MTDO/GPIO15:	Pull-Up
GPIO5:	Pull-Up

Bootstrapping Pins Settings

Pin	Default	Voltage of Internal LDO(VDD_SDIO)	
		3.3V	1.8V
GPIO12/MTDI	Pull-Down	0	1

Pin	Default	Booting Mode	
		SPI Flash Boot	Download Boot
GPIO0	Pull-Up	1	0
GPIO2	Pull-Down	Don't-care	0

Pin	Default	Debugging Log on U0TXD During Booting	
		U0TXD Toggling	U0TXD Silent
GPIO15/MTDO	Pull-Up	1	0

Pin	Default	Timing of SDIO Slave			
		Falling-edge:Output	Falling-edge:Input Rising-edge:Output	Rising-edge:Input Falling-edge:Output	Rising-edge:Input Rising-edge:Output
GPIO15/MTDO	Pull-Up	0	0	1	1
GPIO5	Pull-Up	0	1	0	1

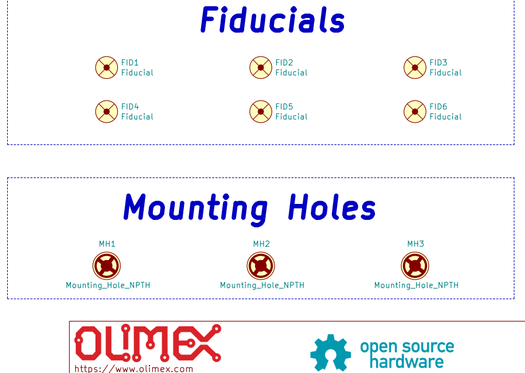

https://www.olimex.com
OLIMEX LTD.
open source hardware
Sheet: /
File: ESP32-PoE_Rev_L1.sch
Title: ESP32-PoE
Size: A2 | Date: 2024-06-06 | Rev: L1
KiCad E.D.A. kicad 5.1.0-rc2-unknown-036be7d80ubuntu16.04.1 | Id: 1/1