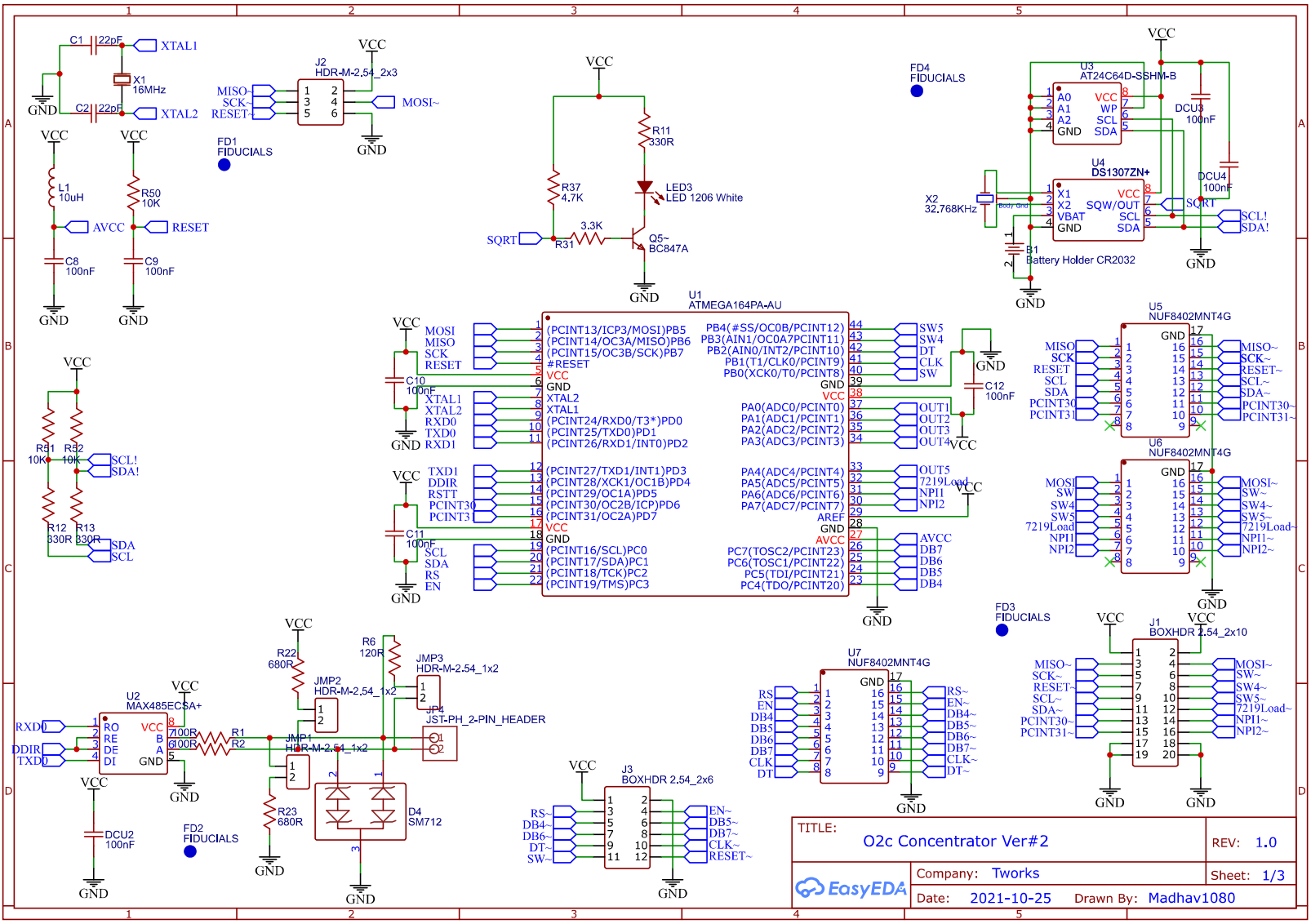
C1 22pF
XTAL1
X1 16MHz
C2 22pF
XTAL2
GND
VCC
J2 HDR-M-2.54_2x3
MISO~
SCK~
RESET~
MOSI~
FD1 FIDUCIALS
L1 10uH
R50 10K
AVCC
RESET
C8 100nF
C9 100nF
R11 330R
R37 4.7K
LED3 LED 1206 White
SQRT
3.3K
R31
Q5~ BC847A
FD4 FIDUCIALS
U3 AT24C64D-SSHM-B
A0
A1
A2
GND
VCC
WP
SCL
SDA
DCU3 100nF
U4 DS1307ZN+
X1
X2
VBAT
GND
VCC
SQW/OUT
SCL
SDA
DCU4 100nF
X2 32.768KHz
B1 Battery Holder CR2032
SCL!
SDA!
R51 10K
R52 10K
R12 330R
R13 330R
SDA
SCL
U1 ATMEGA164PA-AU
MOSI
MISO
SCK
RESET
(PCINT13/ICP3/MOSI)PB5
(PCINT14/OC3A/MISO)PB6
(PCINT15/OC3B/SCK)PB7
#RESET
VCC
GND
XTAL2
XTAL1
(PCINT24/RXD0/T3*)PD0
(PCINT25/TXD0)PD1
(PCINT26/RXD1/INT0)PD2
C10 100nF
TXD1
DDIR
RSTT
PCINT30
PCINT3
(PCINT27/TXD1/INT1)PD3
(PCINT28/XCK1/OC1B)PD4
(PCINT29/OC1A)PD5
(PCINT30/OC2B/ICP)PD6
(PCINT31/OC2A)PD7
C11 100nF
SCL
SDA
RS
EN
(PCINT16/SCL)PC0
(PCINT17/SDA)PC1
(PCINT18/TCK)PC2
(PCINT19/TMS)PC3
PB4(#SS/OC0B/PCINT12)
PB3(AIN1/OC0A7PCINT11)
PB2(AIN0/INT2/PCINT10)
PB1(T1/CLK0/PCINT9)
PB0(XCK0/T0/PCINT8)
PA0(ADC0/PCINT0)
PA1(ADC1/PCINT1)
PA2(ADC2/PCINT2)
PA3(ADC3/PCINT3)
PA4(ADC4/PCINT4)
PA5(ADC5/PCINT5)
PA6(ADC6/PCINT6)
PA7(ADC7/PCINT7)
AREF
AVCC
PC7(TOSC2/PCINT23)
PC6(TOSC1/PCINT22)
PC5(TDI/PCINT21)
PC4(TDO/PCINT20)
SW5
SW4
DT
CLK
SW
C12 100nF
OUT1
OUT2
OUT3
OUT4
OUT5
7219Load
NPI1
NPI2
AVCC
DB7
DB6
DB5
DB4
U5 NUF8402MNT4G
MISO
SCK
RESET
SCL
SDA
PCINT30
PCINT31
MISO~
SCK~
RESET~
SCL~
SDA~
PCINT30~
PCINT31~
U6 NUF8402MNT4G
MOSI
SW
SW4
SW5
7219Load
NPI1
NPI2
MOSI~
SW~
SW4~
SW5~
7219Load~
NPI1~
NPI2~
U2 MAX485ECSA+
RXD0
DDIR
TXD0
RO
RE
DE
DI
VCC
B
A
GND
R1 100R
R2 100R
DCU2 100nF
R22 680R
R6 120R
JMP2 HDR-M-2.54_1x2
JMP3 HDR-M-2.54_1x2
JMP1 HDR-M-2.54_1x2
JP4 JST-PH_2-PIN_HEADER
R23 680R
D4 SM712
FD2 FIDUCIALS
J3 BOXHDR 2.54_2x6
RS~
DB4~
DB6~
DT~
SW~
EN~
DB5~
DB7~
CLK~
RESET~
U7 NUF8402MNT4G
RS
EN
DB4
DB5
DB6
DB7
CLK
DT
RS~
EN~
DB4~
DB5~
DB6~
DB7~
CLK~
DT~
FD3 FIDUCIALS
J1 BOXHDR 2.54_2x10
MISO~
SCK~
RESET~
SCL~
SDA~
PCINT30~
PCINT31~
MOSI~
SW~
SW4~
SW5~
7219Load~
NPI1~
NPI2~
TITLE:
O2c Concentrator Ver#2
REV: 1.0
Company: Tworks
Sheet: 1/3
Date: 2021-10-25
Drawn By: Madhav1080
EasyEDA

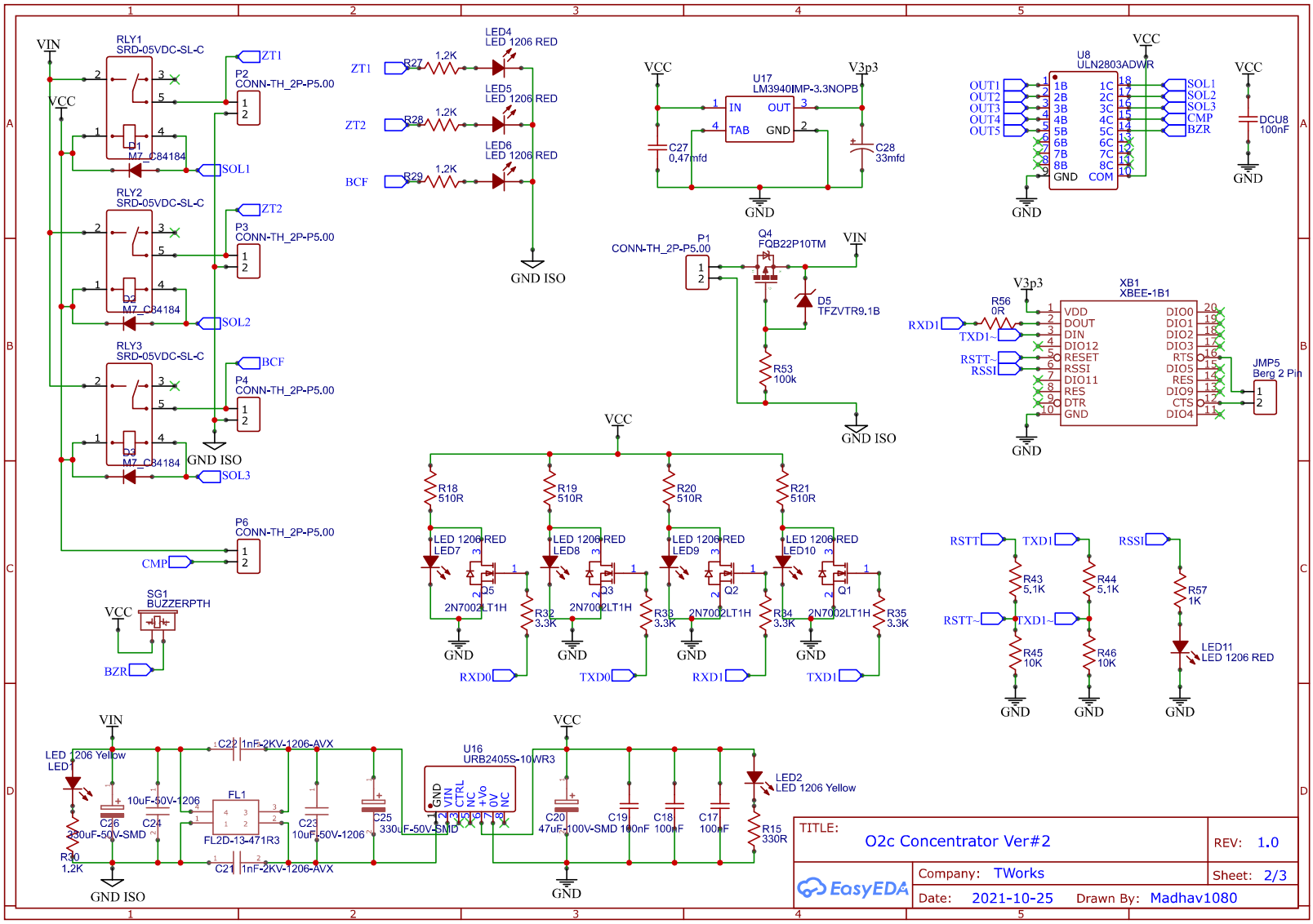
VIN
RLY1
SRD-05VDC-SL-C
D1
M7_C84184
ZT1
P2
CONN-TH_2P-P5.00
SOL1
VCC
RLY2
SRD-05VDC-SL-C
D2
M7_C84184
ZT2
P3
CONN-TH_2P-P5.00
SOL2
RLY3
SRD-05VDC-SL-C
D3
M7_C84184
BCF
P4
CONN-TH_2P-P5.00
SOL3
GND ISO
P6
CONN-TH_2P-P5.00
CMP
SG1
BUZZERPTH
BZR
LED4
LED 1206 RED
LED5
LED 1206 RED
LED6
LED 1206 RED
R27 1.2K
R28 1.2K
R29 1.2K
U17
LM3940IMP-3.3NOPB
IN
OUT
TAB
GND
C27
0.47mfd
C28
33mfd
V3p3
U8
ULN2803ADWR
OUT1
OUT2
OUT3
OUT4
OUT5
SOL1
SOL2
SOL3
CMP
BZR
DCU8
100nF
P1
CONN-TH_2P-P5.00
Q4
FQB22P10TM
D5
TFZVTR9.1B
R53
100k
XB1
XBEE-1B1
R56
0R
RXD1
TXD1~
RSTT~
RSSI
VDD
DOUT
DIN
DIO12
RESET
RSSI
DIO11
RES
DTR
GND
DIO0
DIO1
DIO2
DIO3
RTS
DIO5
RES
DIO9
CTS
DIO4
JMP5
Berg 2 Pin
R18
510R
R19
510R
R20
510R
R21
510R
LED 1206 RED
LED7
LED8
LED9
LED10
Q5
Q3
Q2
Q1
2N7002LT1H
R32
3.3K
R33
3.3K
R34
3.3K
R35
3.3K
RXD0
TXD0
RXD1
TXD1
RSTT
TXD1
RSSI
R43
5.1K
R44
5.1K
R57
1K
R45
10K
R46
10K
LED11
LED 1206 RED
LED 1206 Yellow
LED1
C26
330uF-50V-SMD
C24
10uF-50V-1206
FL1
FL2D-13-471R3
C22
1nF-2KV-1206-AVX
C21
1nF-2KV-1206-AVX
C23
10uF-50V-1206
C25
330uF-50V-SMD
R30
1.2K
U16
URB2405S-10WR3
GND
VIN
CTRL
NC
+Vo
0V
NC
C20
47uF-100V-SMD
C19
100nF
C18
100nF
C17
100nF
LED2
LED 1206 Yellow
R15
330R
TITLE:
O2c Concentrator Ver#2
REV: 1.0
Company: TWorks
Sheet: 2/3
Date: 2021-10-25
Drawn By: Madhav1080
EasyEDA

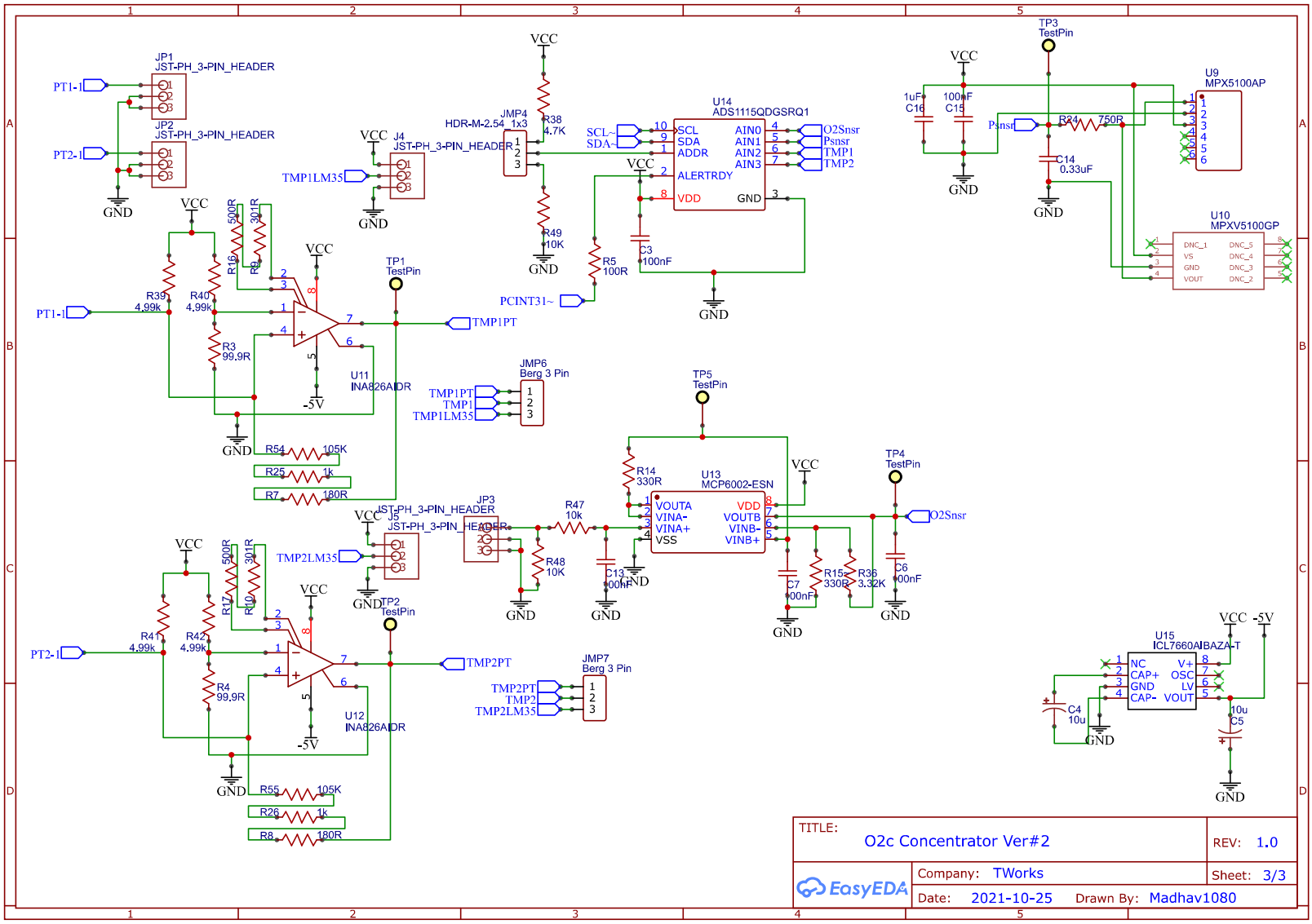

TITLE: O2c Concentrator Ver#2		REV: 1.0
EasyEDA	Company: TWorks	Sheet: 3/3
	Date: 2021-10-25	Drawn By: Madhav1080