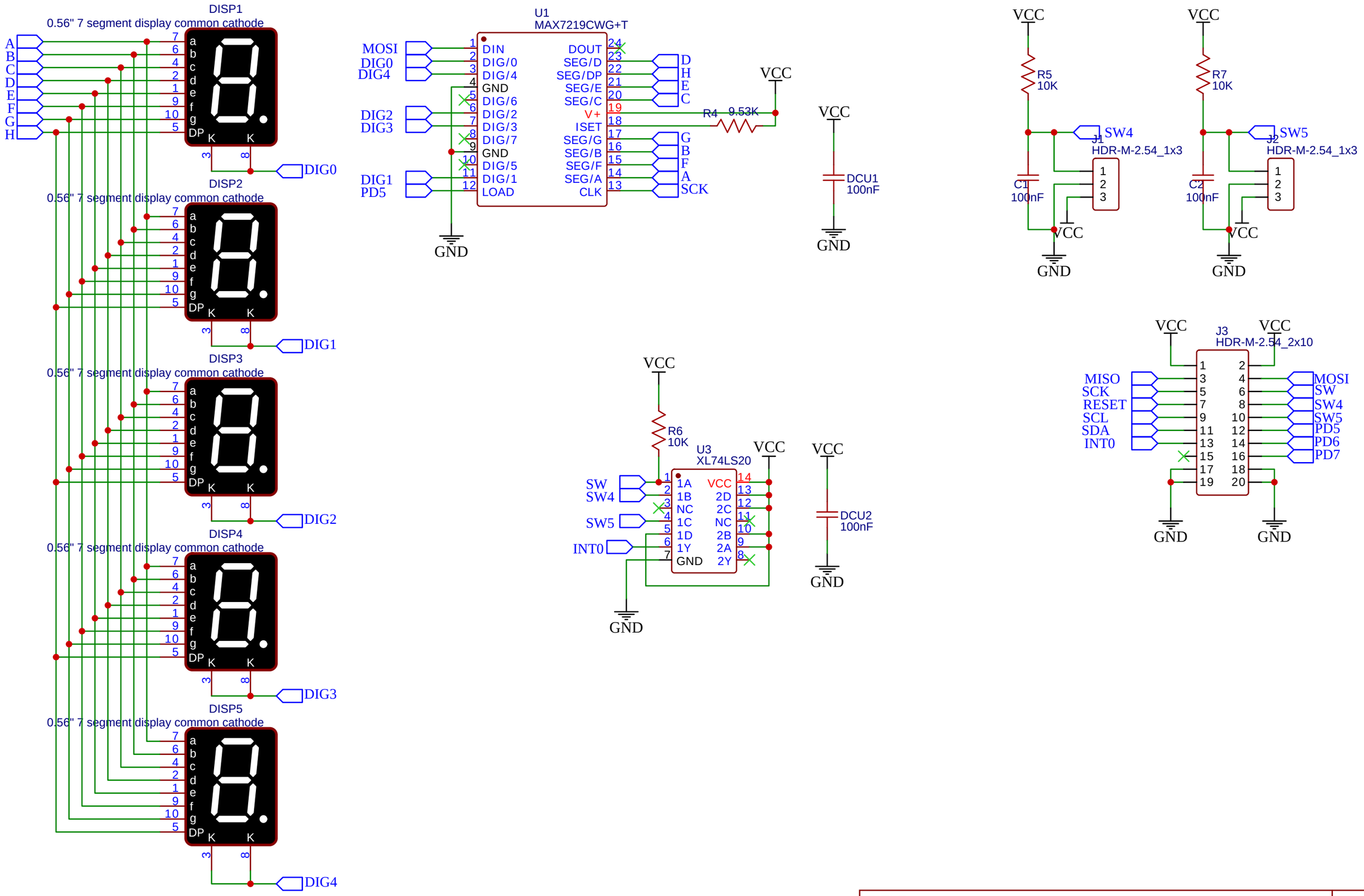

TITLE: O2C Display	REV: 2.0
EasyEDA — Company: TWorks	Sheet: 1/2
Date: 2021-10-26	Drawn By: Madhav1080

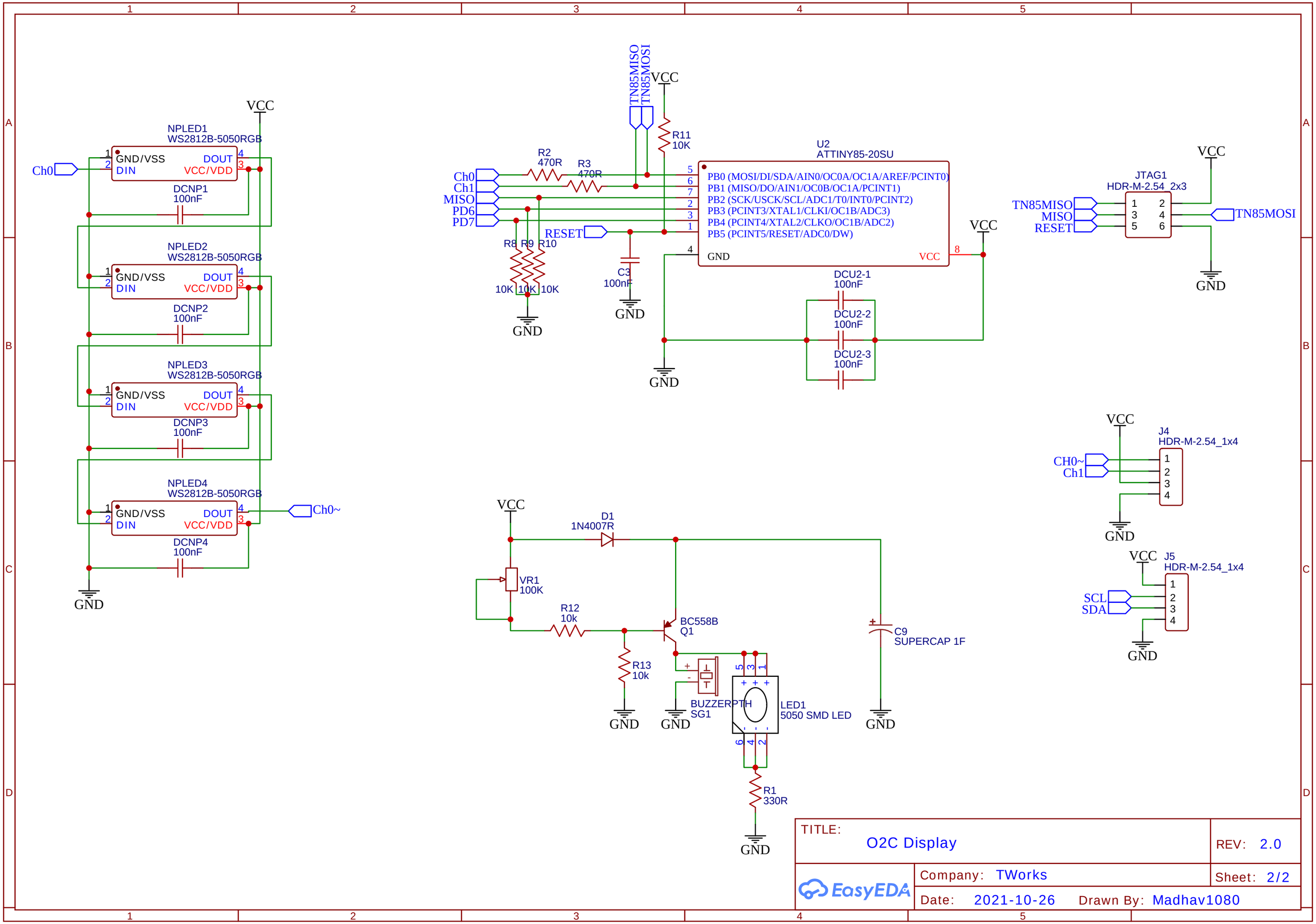

TITLE: O2C Display

REV: 2.0

Company: TWorks

Sheet: 2/2

Date: 2021-10-26

Drawn By: Madhav1080