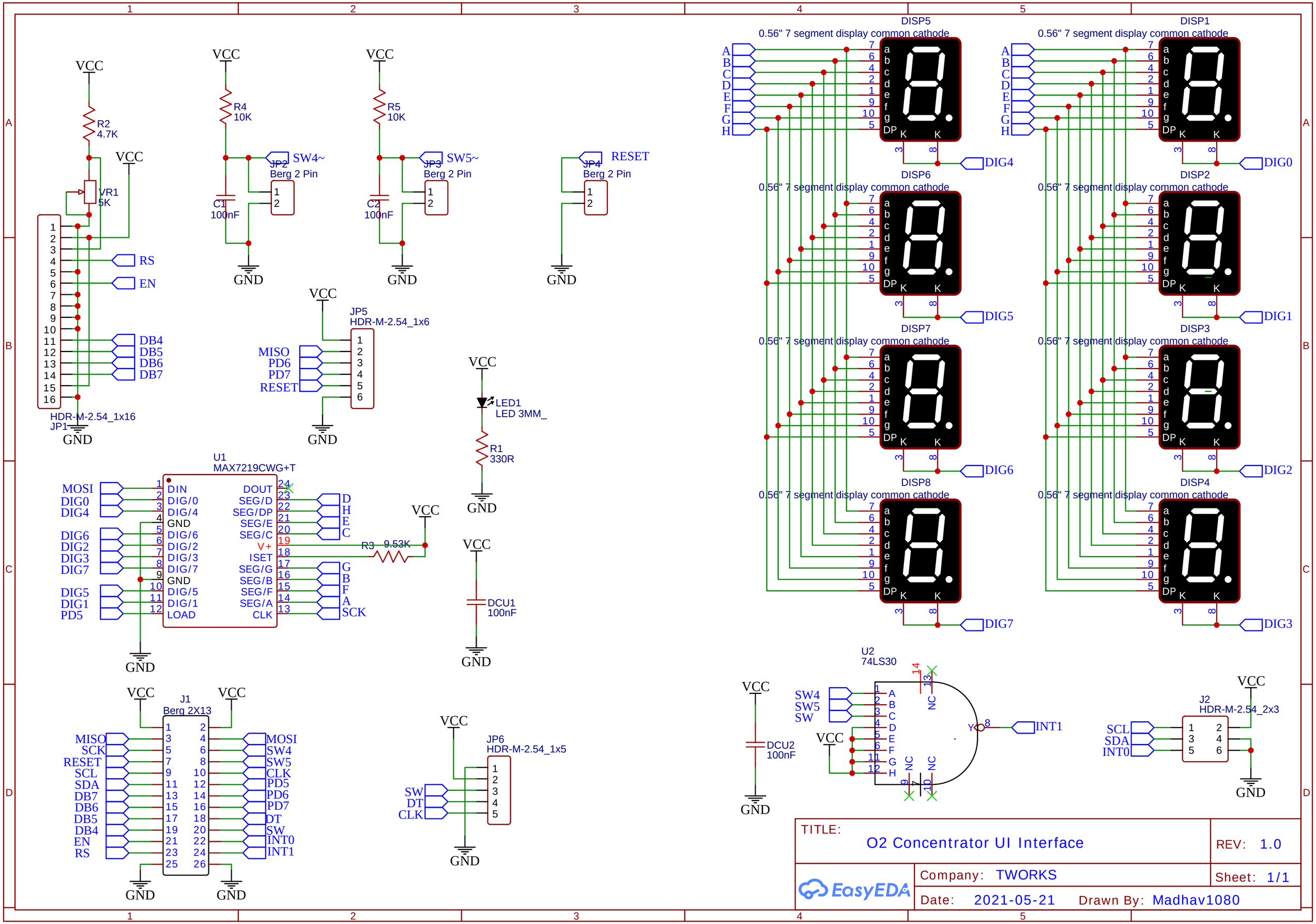
VCC
R2
4.7K
VR1
5K
HDR-M-2.54_1x16
JP1
GND
RS
EN
DB4
DB5
DB6
DB7
R4
10K
C1
100nF
JP2
SW4~
Berg 2 Pin
R5
10K
C2
100nF
JP3
SW5~
JP4
RESET
JP5
HDR-M-2.54_1x6
MISO
PD6
PD7
RESET
LED1
LED 3MM_
R1
330R
U1
MAX7219CWG+T
MOSI
DIG0
DIG4
DIG6
DIG2
DIG3
DIG7
DIG5
DIG1
PD5
DIN
DIG/0
DIG/4
GND
DIG/6
DIG/2
DIG/3
DIG/7
DIG/5
DIG/1
LOAD
DOUT
SEG/D
SEG/DP
SEG/E
SEG/C
V+
ISET
SEG/G
SEG/B
SEG/F
SEG/A
CLK
D
H
E
C
G
B
F
A
SCK
R3
9.53K
DCU1
100nF
J1
Berg 2X13
MISO
SCK
RESET
SCL
SDA
DB7
DB6
DB5
DB4
EN
RS
MOSI
SW4
SW5
CLK
PD5
PD6
PD7
DT
SW
INT0
INT1
JP6
HDR-M-2.54_1x5
SW
DT
CLK
DISP5
DISP1
DISP6
DISP2
DISP7
DISP3
DISP8
DISP4
0.56" 7 segment display common cathode
DIG4
DIG0
DIG5
DIG1
DIG6
DIG2
DIG7
DIG3
U2
74LS30
SW4
SW5
SW
DCU2
100nF
INT1
J2
HDR-M-2.54_2x3
SCL
SDA
INT0
TITLE:
O2 Concentrator UI Interface
REV: 1.0
Company: TWORKS
Sheet: 1/1
Date: 2021-05-21
Drawn By: Madhav1080
EasyEDA