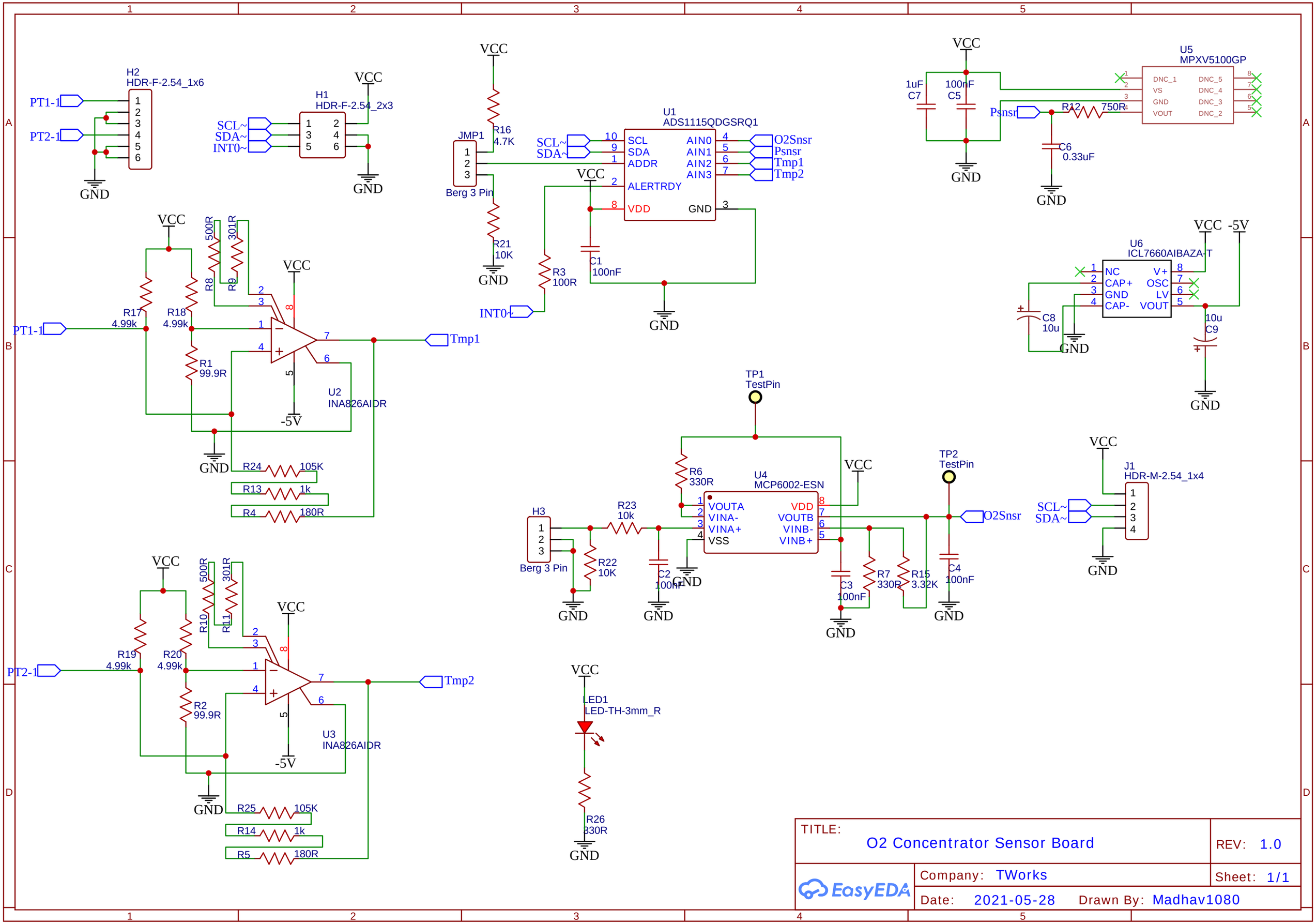

TITLE: O2 Concentrator Sensor Board

REV: 1.0

Company: TWorks

Sheet: 1/1

Date: 2021-05-28

Drawn By: Madhav1080