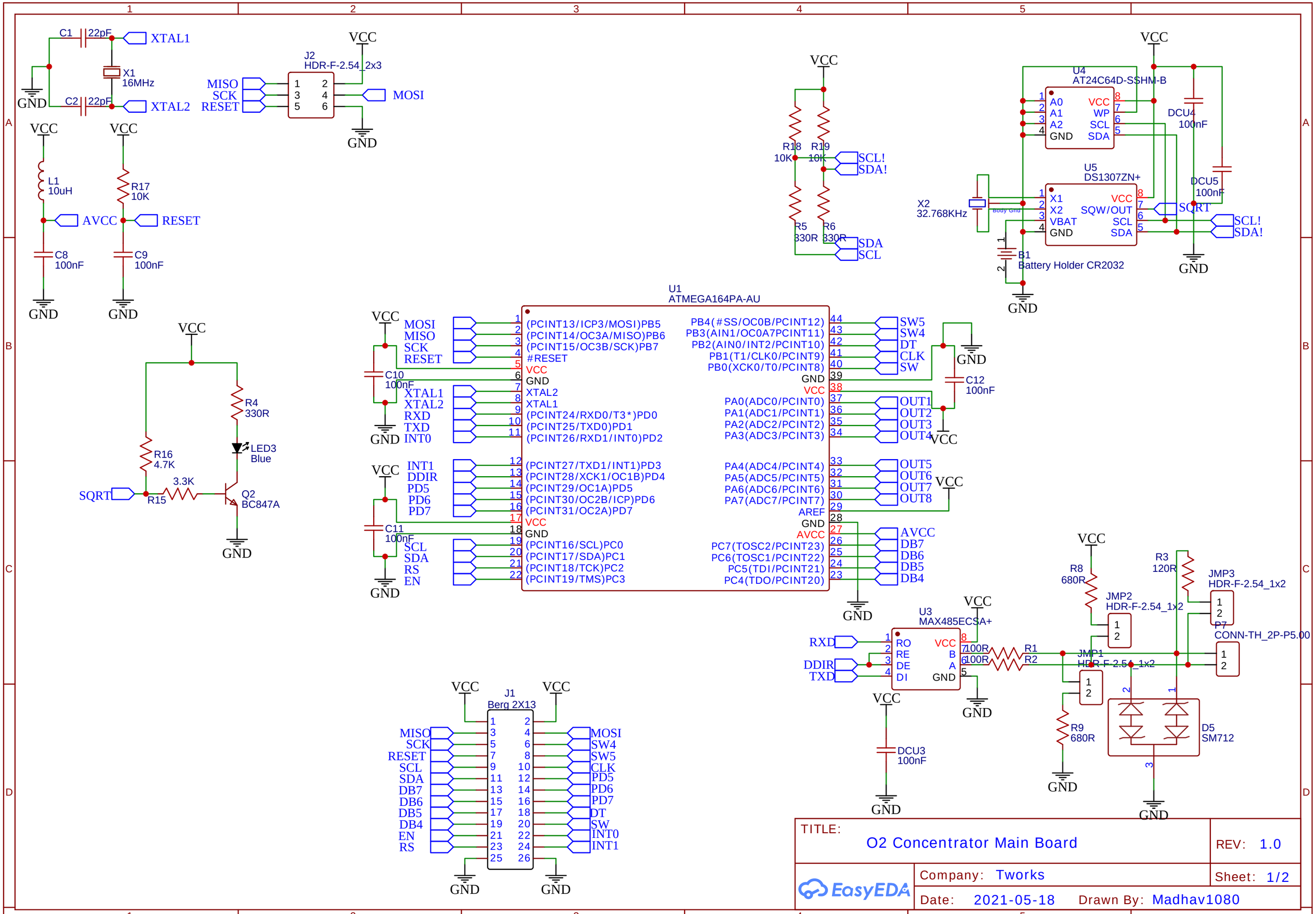
C1 22pF
XTAL1
X1 16MHz
C2 22pF
XTAL2
GND
VCC
J2 HDR-F-2.54_2x3
MISO
SCK
RESET
MOSI
L1 10uH
AVCC
R17 10K
RESET
C8 100nF
C9 100nF
R18 10K
R19 10K
SCL!
SDA!
R5 330R
R6 330R
SDA
SCL
U4 AT24C64D-SSHM-B
A0
A1
A2
GND
VCC
WP
SCL
SDA
DCU4 100nF
U5 DS1307ZN+
X1
X2
VBAT
GND
VCC
SQW/OUT
SCL
SDA
DCU5 100nF
SQRT
X2 32.768KHz
B1 Battery Holder CR2032
R4 330R
LED3 Blue
R16 4.7K
3.3K
SQRT
R15
Q2 BC847A
U1 ATMEGA164PA-AU
(PCINT13/ICP3/MOSI)PB5
(PCINT14/OC3A/MISO)PB6
(PCINT15/OC3B/SCK)PB7
#RESET
VCC
GND
XTAL2
XTAL1
(PCINT24/RXD0/T3*)PD0
(PCINT25/TXD0)PD1
(PCINT26/RXD1/INT0)PD2
(PCINT27/TXD1/INT1)PD3
(PCINT28/XCK1/OC1B)PD4
(PCINT29/OC1A)PD5
(PCINT30/OC2B/ICP)PD6
(PCINT31/OC2A)PD7
VCC
GND
(PCINT16/SCL)PC0
(PCINT17/SDA)PC1
(PCINT18/TCK)PC2
(PCINT19/TMS)PC3
PB4(#SS/OC0B/PCINT12)
PB3(AIN1/OC0A7PCINT11)
PB2(AIN0/INT2/PCINT10)
PB1(T1/CLK0/PCINT9)
PB0(XCK0/T0/PCINT8)
GND
VCC
PA0(ADC0/PCINT0)
PA1(ADC1/PCINT1)
PA2(ADC2/PCINT2)
PA3(ADC3/PCINT3)
PA4(ADC4/PCINT4)
PA5(ADC5/PCINT5)
PA6(ADC6/PCINT6)
PA7(ADC7/PCINT7)
AREF
GND
AVCC
PC7(TOSC2/PCINT23)
PC6(TOSC1/PCINT22)
PC5(TDI/PCINT21)
PC4(TDO/PCINT20)
MOSI
MISO
SCK
RESET
C10 100nF
XTAL1
XTAL2
RXD
TXD
INT0
INT1
DDIR
PD5
PD6
PD7
C11 100nF
SCL
SDA
RS
EN
SW5
SW4
DT
CLK
SW
C12 100nF
OUT1
OUT2
OUT3
OUT4
OUT5
OUT6
OUT7
OUT8
AVCC
DB7
DB6
DB5
DB4
J1 Berg 2X13
MISO
SCK
RESET
SCL
SDA
DB7
DB6
DB5
DB4
EN
RS
MOSI
SW4
SW5
CLK
PD5
PD6
PD7
DT
SW
INT0
INT1
U3 MAX485ECSA+
RO
RE
DE
DI
VCC
B
A
GND
RXD
DDIR
TXD
R1 100R
R2 100R
DCU3 100nF
R8 680R
R3 120R
JMP2 HDR-F-2.54_1x2
JMP3 HDR-F-2.54_1x2
P7 CONN-TH_2P-P5.00
JMP1 HDR-F-2.54_1x2
R9 680R
D5 SM712
TITLE:
O2 Concentrator Main Board
REV: 1.0
Company: Tworks
Sheet: 1/2
Date: 2021-05-18
Drawn By: Madhav1080
EasyEDA

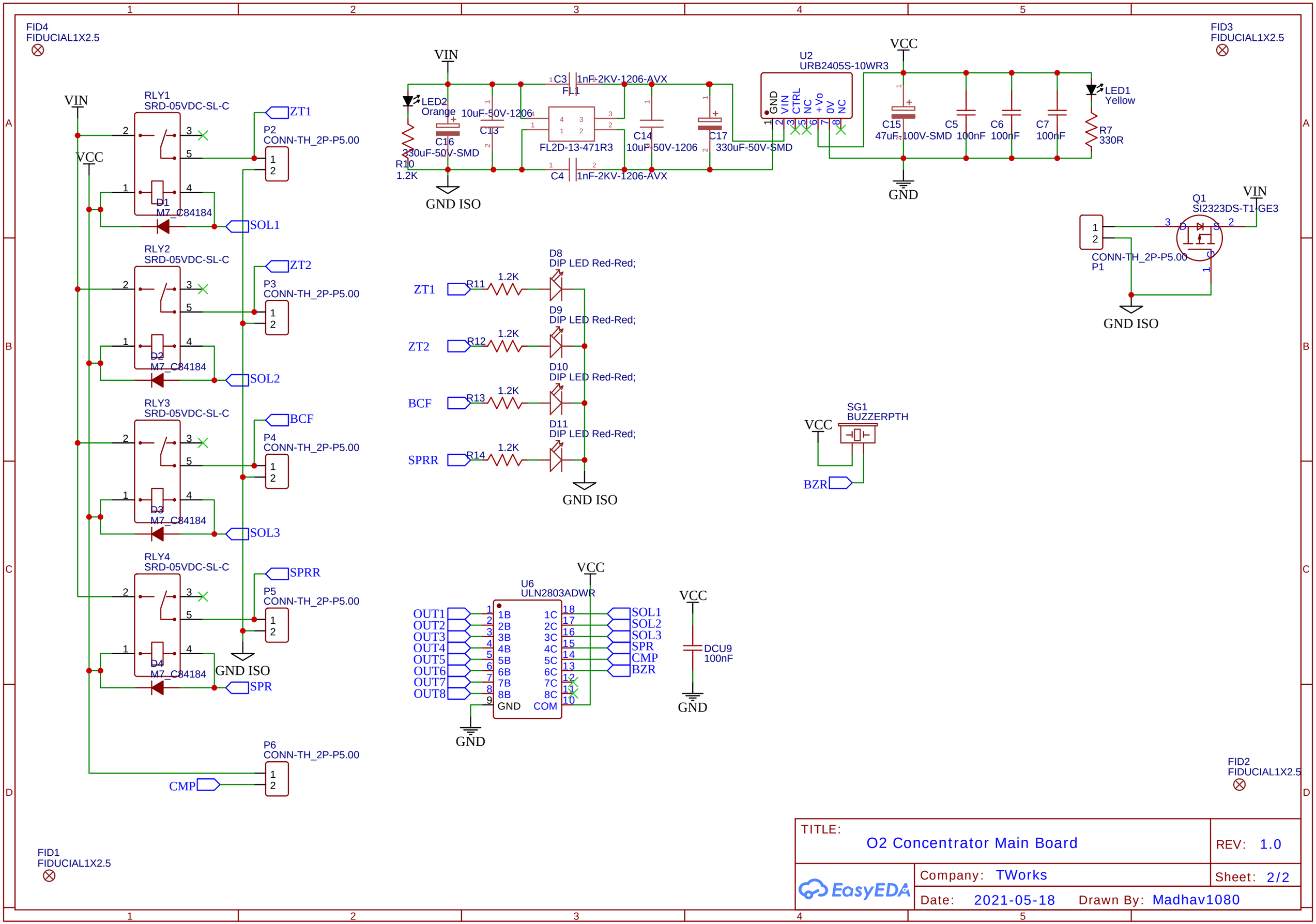

TITLE: O2 Concentrator Main Board		REV: 1.0
EasyEDA	Company: TWorks	Sheet: 2/2
	Date: 2021-05-18 Drawn By: Madhav1080	