MGA-631P8 LNA for 500 – 700 MHz

Application Note 5383

Introduction

This application note briefly describes adapting the MGA-631P8 for operation in the 500-700 MHz frequency range. A more thorough description of the device and the application circuit can be found in both the datasheet and application note AN5303.

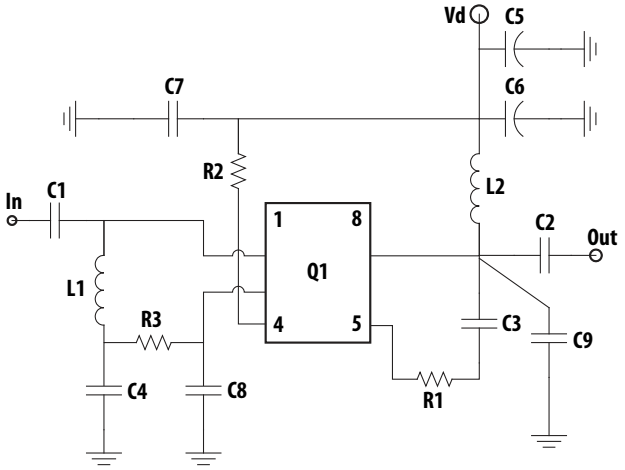

Figure 1. Application circuit

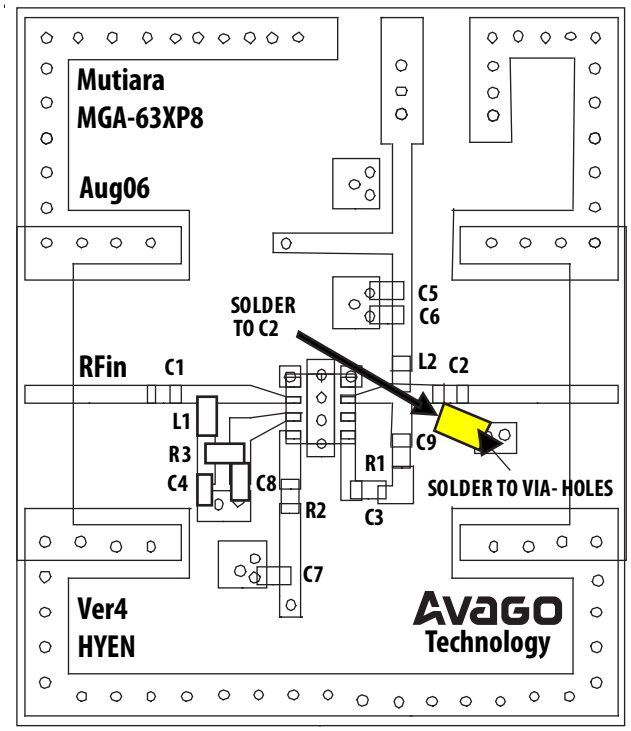

Figure 2. Component placement on demonstration board

The preliminary design was created using the S-parameters associated with the following conditions:

Vdd = 4 V, Idd = 60 mA and R1 = 91 Ω.

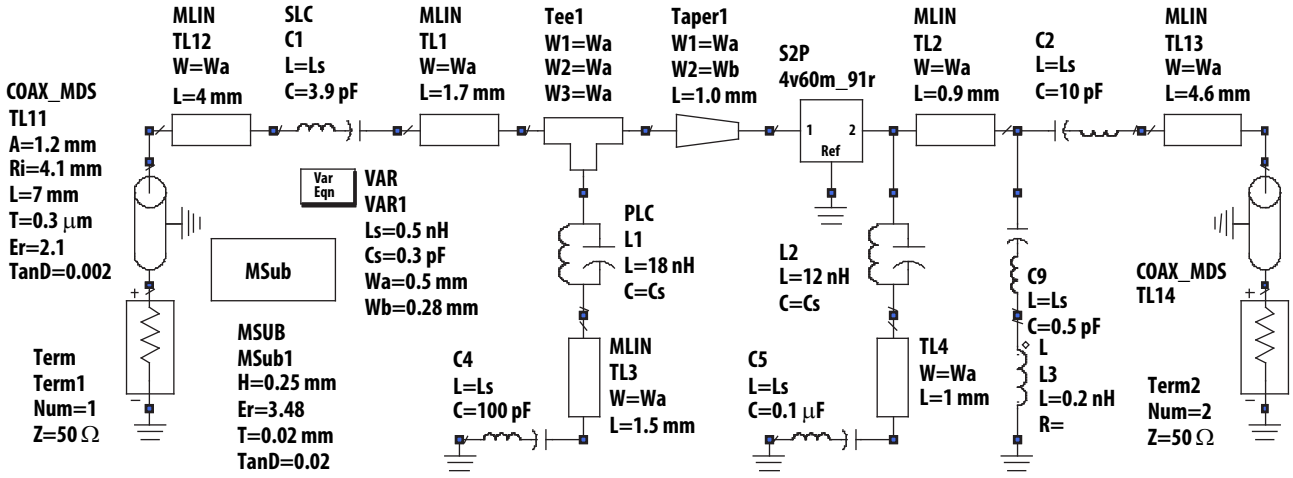

Figure 3. Simulation circuit

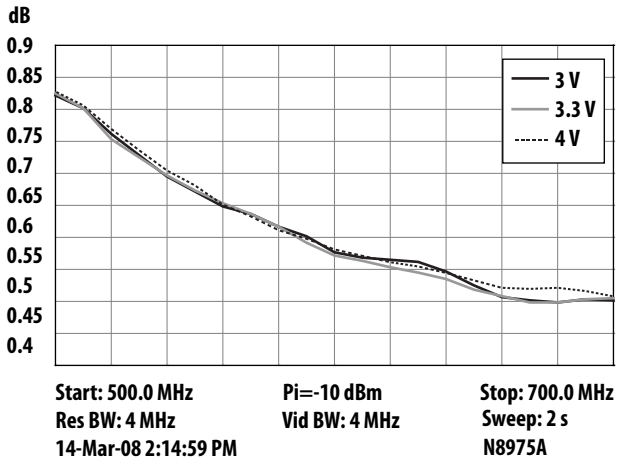

Figure 4. Noise figure vs. frequency as a function of supply voltage V_{dd}

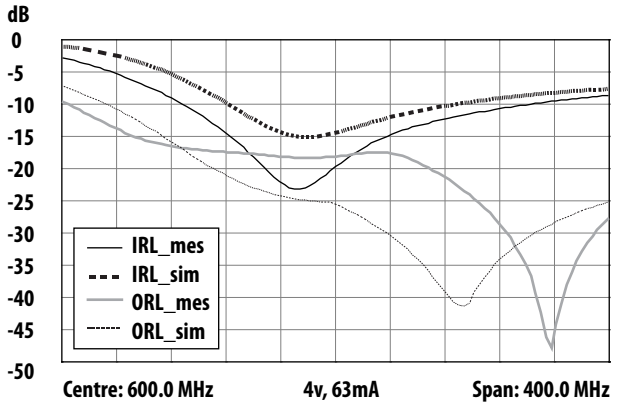

Figure 5. Input and output return loss – simulated vs. measured

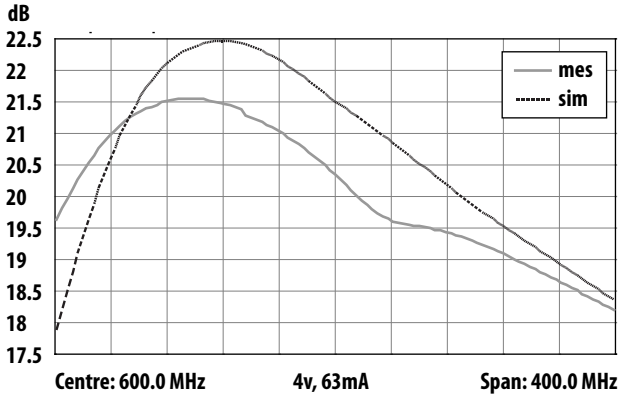

Figure 6. Gain vs. frequency – simulated and measured

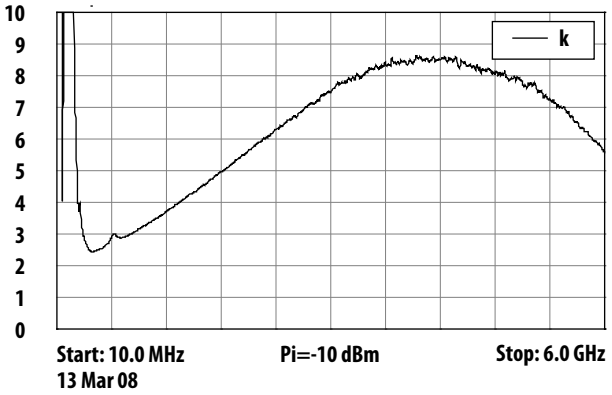

Figure 7. Rollett stability factor vs. frequency

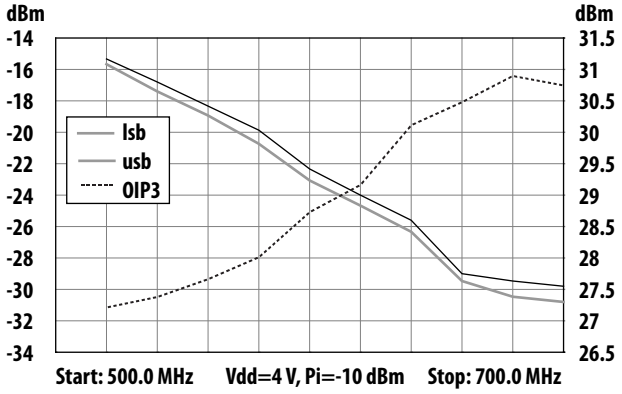

Figure 8. Third-order intermodulation product and intercept point vs. frequency

Table 1. Application Circuit Part List

Part	Size	Value
L1	0402	18 nH
L2	0402	12 nH
C1	0402	3.9 pF
C2	0402	10 pF
C3	0402	5.6 pF
C4	0402	100 pF
C5	0402	0.1 µF
C6	0402	100 pF
C7	0402	0.1 µF
C8	0402	10 nF
C9	0603	0.5 pF
Q1		MGA-631P8
R1	0402	91 Ω
R2	0402	510 Ω
R3	0402	56 Ω

Appendix 1: Widening the Operating Bandwidth

In the previous example, the operating bandwidth is limited by the IRL. Adding an additional impedance transformation stage to the input matching network can widen the frequency range (i.e. IRL < -10 dB). In the first part of this two-step matching, L3 and Ci form a low-pass L network to match the real part of the MGA-631P8 input impedance (R_i) to an intermediate impedance (Z_{int}). The second section, L1 and C1, finally transform the intermediate impedance to 50 Ω. Matching in two stages doubles the span where IRL <-10 dB from 170 to 350 MHz.

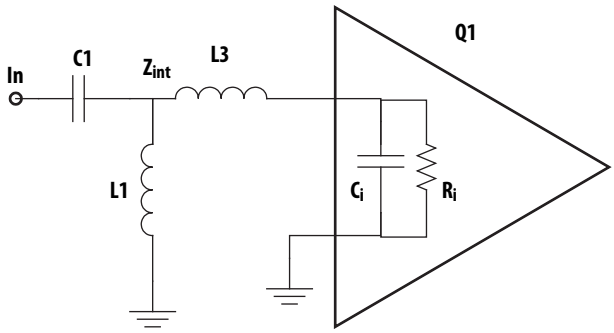

Figure A1. Simulation circuit of the two-section input match

Table A1. Partial Part List for the Two-section Input Match

Part	Size	Value
L1	0402	22 nH
L3	0402	27 nH
C1	0402	4.3 pF

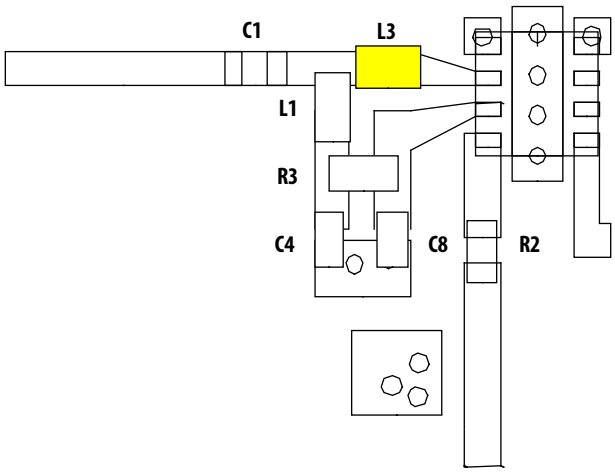

Figure A2. Component placement for two-stage input match.

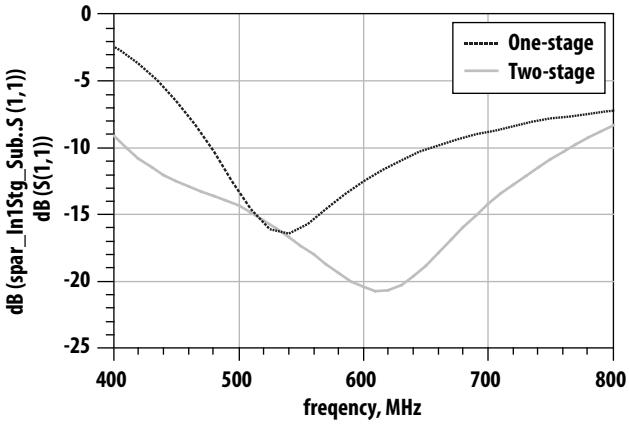

Figure A3. Simulated input return loss comparison of one-stage (blue) and two-stage (red) stage input match

For product information and a complete list of distributors, please go to our web site: **www.avagotech.com**

Avago, Avago Technologies, and the A logo are trademarks of Avago Technologies in the United States and other countries.
Data subject to change. Copyright © 2005-2010 Avago Technologies. All rights reserved.
AV02-1140EN - August 31, 2010