Your **Imagination.** Our **Innovation.**

AVAGO TECHNOLOGIES

Small Cell Product Solutions

Application Solutions

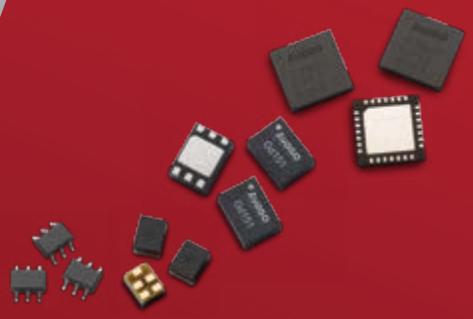

Avago Technologies Small Cell Solutions

Designers of Small Cell BTS systems face many technical challenges when specifying and designing an RF front-end. In many ways, those challenges are similar to the ones faced by designers of mobile handsets. There are issues with size, power consumption, power added efficiency (PAE), receiver sensitivity, frequency band coverage, co-existence with other radios, and hardware design and layout flexibility.

Avago Technologies has addressed these concerns with a broad portfolio of RF product solutions including power amplifiers (PA), low noise amplifiers (LNA), FBAR filters and duplexers, and integrated GPS/GNSS LNA filter modules for Small Cell BTS applications.

Highly Differentiated Product Portfolio

- Comprehensive frequency band coverage for cellular, GPS and WiFi
- Best-in-class PA featuring unmatched linearity, gain and power efficiency with integrated power detector and shutdown function
- Ultra low NF LNA greatly enhancing Small Cell receiver sensitivity
- Innovative FBAR filter enabling stringent adjacent multi-band operation without performance degradation due to interference
- Common component footprint and application circuitry across different frequency bands simplifying platform-based hardware design
- Integrated modules reducing parts count, board space, design time and BOM cost

Typical Small Cell RF Front End

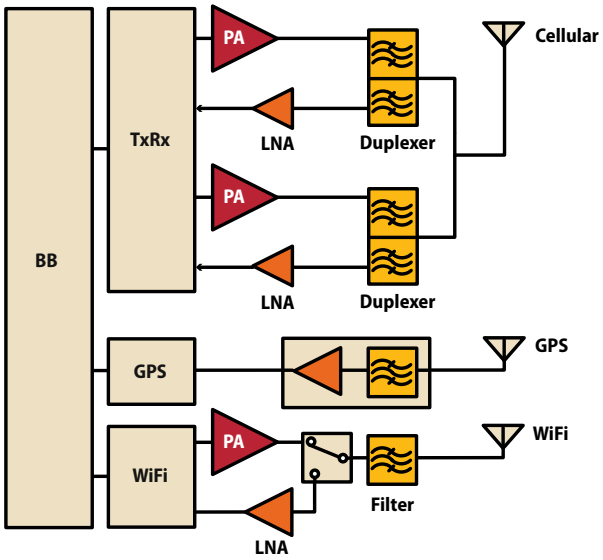

Enterprise Small Cell Front End Suggested Components

Band	12	13	26	5	8	GPS/GNSS
Frequency Range (MHz)	698-716 728-746	777-787 746-756	814-849 859-894	824-849 869-894	880-915 925-960	1575 (GPS L1) 1602 (GNSS L1)
PA	MGA-43013	MGA-43013	MGA-43428	MGA-43428	MGA-43828	–
Filter/Duplexer	–	–	–	–	ACMD-7610	–
LNA	MGA-683P8 MGA-62563	MGA-683P8 MGA-62563	MGA-683P8 MGA-62563	MGA-683P8 MGA-62563	MGA-683P8 MGA-62563	MGA-24106 ALM-2506
LNA/Filter Module	–	–	–	–	–	ALM-1x12 ALM-2x12 ALM-3012 ALM-GN001

Minimal Guard Band between WiFi and adjacent LTE Band

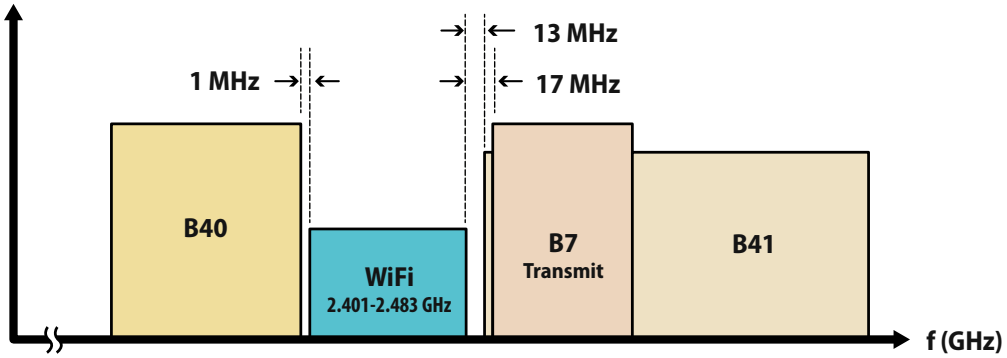

Enabling LTE & WiFi Coexistence in Small Cells

With FBAR, Avago is enabling multi-band multi-standard radios in Small Cell BTS. Radios that operate over multiple bands, in multiple regions of the world, and with simultaneous LTE voice and data are made possible with Avago's FBAR technology. 4G/LTE frequency bands are often co-located next to other frequency bands - sometimes with little to no guard bands separating adjacent bands. With steep filter skirts and superior out of band rejection, FBAR allows today's Small Cells to co-exist in the presence of frequencies that would otherwise interfere with normal operation.

For example, mobile data bandwidth offload via WiFi connectivity is an important way mobile operators can increase network capacity and coverage. However, integrating certain LTE radios into a Small Cell system can pose challenging coexistence problems affecting the 2.4GHz WiFi operation. There are minimal guard bands between the LTE Band 40 and WiFi and between the WiFi and LTE Band 41 or Band 7 Transmit. Without superior filtering, WiFi signals could be blocked by strong adjacent LTE signals.

	3	2	25	4	1	40	WiFi	41	7
	1710-1785 1805-1880	1850-1910 1930-1990	1850-1915 1930-1995	1710-1755 2110-2155	1920-1980 2110-2170	2300-2400	2401-2483	2496-2690	2500-2570 2620-2690
	MGA-43003	MGA-43528	MGA-43528	MGA-43628	MGA-43628	MGA-43040	MGA-43024	MGA-43328	MGA-43728
	ACMD-6x03	ACMD-6x02 ACMD-74xx	ACMD-6x25	ACMD-7609	ACMD-7614	ACPF-8x40	ACPF-7x24 ACFF-1024	ACPF-7x41	ACMD-6xx7
	MGA-684P8 MGA-62563	MGA-684P8 MGA-62563	MGA-684P8 MGA-62563	MGA-684P8 MGA-62563	MGA-684P8 MGA-62563	MGA-684P8 MGA-62563	MGA-64606 MGA-62563	MGA-684P8 MGA-62563	MGA-684P8 MGA-62563
	–	–	–	–	–	–	–	–	–

Your Imagination. Our Innovation

Avago Technologies is a leading designer, developer and global supplier of a broad range of analog, digital, mixed signal and optoelectronics components and subsystems with a focus in III-V compound semiconductor design and processing. Backed by an extensive portfolio of intellectual property, Avago products serve four primary target markets: wireless communications, wired infrastructure, enterprise storage, and industrial and other. Avago has a global employee presence and rich heritage of technical innovation spanning over six decades.

Avago has strong market positions across a broad range of market segments with highly differentiated products that include:

- Film Bulk Acoustic Resonator (FBAR) Filters
- RF Front End Modules
- Parallel Optics Transceivers
- High Speed SerDes ASIC
- HDD Read Channel & Preamplifiers
- RAID and SAS I/O Controllers
- PCIe Switches
- Optocouplers
- Motion Encoders
- Industrial Fiber Solutions
- LED Display & Signage Solutions

For product information and a complete list of distributors, please visit our website:

www.avagotech.com
www.avagotech.com /rf

Avago, Avago Technologies, and the A logo are trademarks of Avago Technologies in the United States and other countries.
Data subject to change. Copyright © 2014-2015 Avago Technologies.
AV00-0277EN 03/30/15

AVAGO TECHNOLOGIES