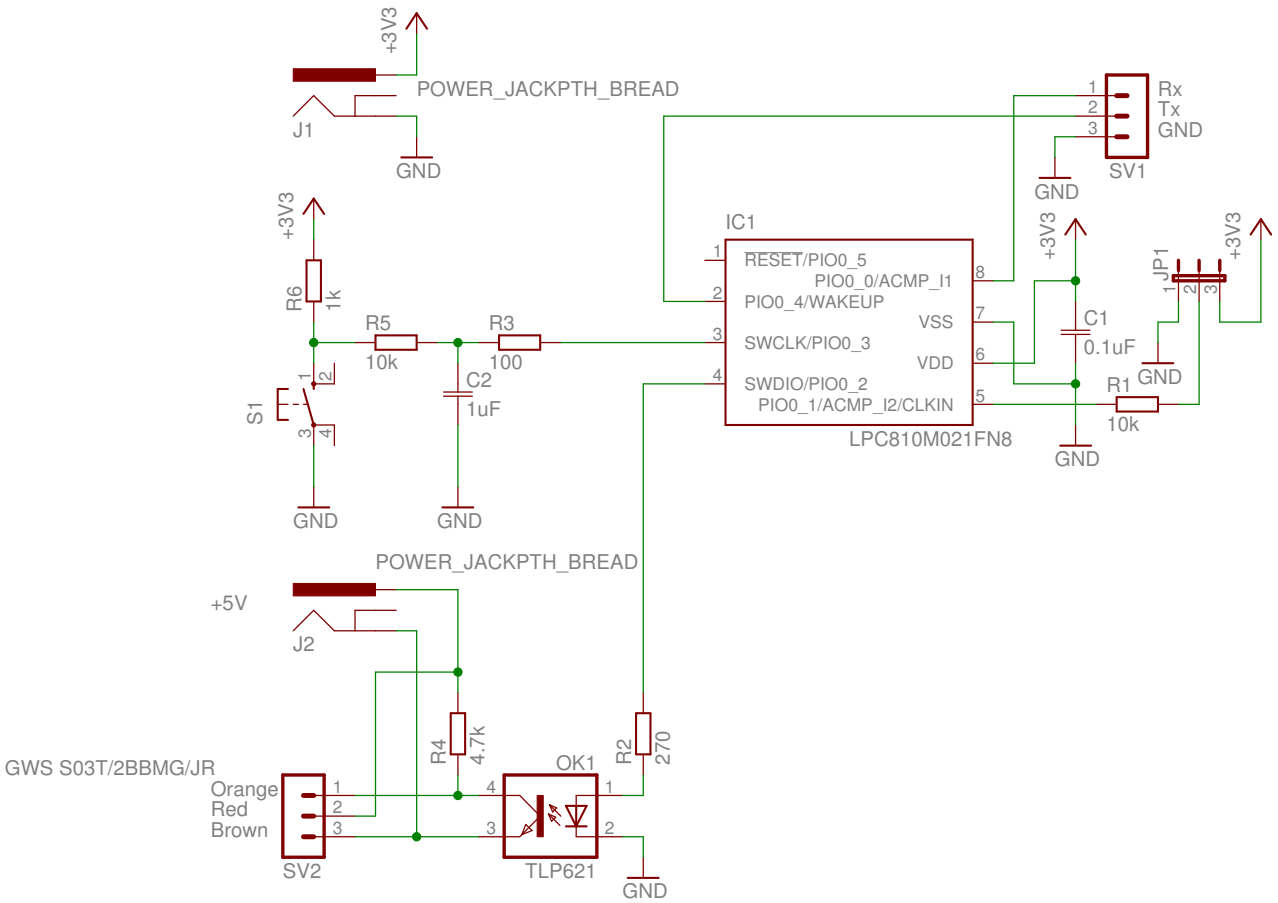

This work is licensed under the Creative Commons Attribution-ShareAlike 4.0 International License.
To view a copy of this license, visit http://creativecommons.org/licenses/by-sa/4.0/.

LPC810M021FN8	Design: Toshiaki Yoshida
	rc_servo
	1/7/15 3:02 PM
MPC Research Ltd.	Sheet: 1/1